e¨emv‡qi Rb¨ †gav mœú` | Mšgvjv

3

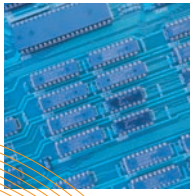

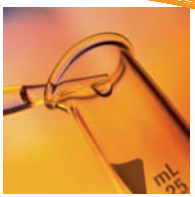

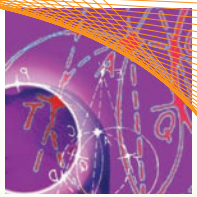

Bb‡fw›Us `v wdDPvi

¶` I gvSvwi wkí cwZôv‡bi Rb¨ †c‡U›U welqK cv_wgK aviYv

WIPO
WORLD INTELLECTUAL PROPERTY ORGANIZATION

Ôe¨emv‡qi †¶‡Î †gav m¤ú`Ô MŠgvjvi Ab¨vb¨ cKvkbv

1. †gwKs G gvK: ¶` I gvSwi wkí cwZôv‡bi Rb¨ †UWgvK welqK cv_wgK avi Yv| WIPO cKvkbv bs 900|

2. jwKs ¸W: ¶` I gvSwi wkí cwZôv‡bi Rb¨ BÛw÷qvj wWRvBb welqK cv_wgK avi Yv| WIPO cKvkbv bs 498|

3. Bb‡fwUs `v wdDPvi : ¶` I gvSwi wkí cwZôv‡bi Rb¨ †c‡U›U welqK cv_wgK avi Yv| WIPO cKvkbv bs 917|

4. wµ‡qwUf GKem‡ckb: ¶` I gvSwi wkí cwZôv‡bi Rb¨ KwcivBU welqK cv_wgK avi Yv| WIPO cKvkbv bs 918| (Avmb)

hveZxq cKvkbv cvIqv hv‡e WIPOÔi B-eKm‡c, hvi wVKvbv :
www.wipo.int/ebookshop

mZKZvgjK †NvlYv t GB wb‡`wkKvq Aš‡f³ Z_¨ †Kv‡bvfv‡eB †ckvMZ AvBwb mnvqZvi weKí wKQ bq| welqe¯ m¤úwKZ †gŠwjK avi Yv c`vbB GB wb‡`wkKvi D‡Ïk¨|

WIPO ¯Z (2006) AvBbvbM AbgwZ e¨ZxZ, KwcivBU ¯ZwaKvixi wjwLZ AbgwZ Qvov GB cKvkbvi †Kv‡bv AskB B‡j±wbK¨wj ev g¨vKwbK¨wj, †h †Kv‡bv AvKvi ev fv‡e cbi"rcv`b ev weZiY Kiv hv‡e bv|

This publication has been translated and reproduced with the permission of the World Intellectual Property Organization (*WIPO*), the owner of the copyright, on the basis of the original English language version. The Secretariat of *WIPO* assumes no liability or responsibility with regard to the translation and transformation of the publication.

This translated publication was financed under the EU-WIPO Intellectual Property Rights Project for Bangladesh

European Union

WIPO
WORLD INTELLECTUAL PROPERTY ORGANIZATION

f wgKv

GB wb‡`wkKv Ôe¨emv‡qi †¶‡Î †gav m¤ú`Ô Mšgvjvi ZZxq wb‡`wkKv| Gi gj welqe¯ n‡"Q †c‡U›U, †hUv GKwU †Kv¤úvwbi bZb I be¨ ceZbgjK aviYv Ges chw³MZ m¶gZv †_‡K m‡ev"P mweav jv‡fi ¶gZv ew×i Ab¨Zg cavb A¯| Ávb msMVb m¤ú`¸‡jvi e¨e¯vcbv, we‡kl K‡i bZb aviYv, †h †Kv‡bv cwZôv‡bi cwieZb, Lvc LvIqv‡bv Ges bZb m‡hvM mØ¨envi‡ii m¶gZvi †¶‡Î AZ¨š c‡qvRbxq, †h‡nZ Zviv GKwU `"Z cwieZbkxj e¨emvwqK cwigÊ‡j cwZ‡hvwMZvq AeZxY nq|

G mg‡qi Ávb-wbfi A_bxwZ‡Z, GKwU †Kv¤úvwbi †c‡U›U †KŠkj Gi e¨emvwqK †KŠk‡ji Ab¨Zg Dcv`vb nIqv DwPZ| AZ¨š mnR I ev¯emv¤§Z Dcv‡q GB wb‡`wkKv me ai‡bi e¨emvwqK cwZôv‡bi †¶‡Î †c‡U›U e¨e¯vi mweav¸‡jv e¨vL¨v K‡i‡Q| GKwU †c‡U›U mi¶v, e¨envi ev KvhKixKi‡Yi †¶‡Î cvVK‡`i‡K GKRb †c‡U›U we‡kl‡Ái m‡½ civg‡ki mcvwik Kiv n‡"Q, †gŠwjK aviYv¸‡jv †evSvcovq cvVK‡`i mnvqZv Ki‡Z Ges †c‡U›U wel‡q GKRb we‡kl‡Ái m‡½ civg‡ki mgq mwVK ck¸‡jv DÌvc‡b mvnvh¨ Ki‡Z GB wb‡`wkKvq ev¯emv¤§Z Z_¨¸‡jv c`vb Kiv n‡q‡Q|

¶` I gvSwi wkí cwZôvb ¸‡jv‡K Zv‡`i mvgwMK e¨emvwqK, wecYb Ges idZwb †KŠk‡j chw³ I †c‡U›U †KŠkj‡K GKxfZ Kivi Rb¨ GB wb‡`wkKv e¨envi‡i DrmvwnZ Kiv n‡"Q| weke¨vcx smeÔi c‡qvRb †hb h_v_fv‡e †gUv‡bv m¤e nq Zv wbwðZ Ki‡Z WIPO GB wb‡`wkKv Av‡iv cwigvwRZ Ki‡Z †h †Kv‡bv gZvgZ‡K ¯vMZ Rvbv‡"Q|

RvZxq cwZôvb I ¯vbxq Askx`vi‡`i mn‡hvwMZvq GB wb‡`wkKvi wbw`ó †`k Dc‡hvMx ms¯‹iY Dbqb Kiv †h‡Z cv‡i| †`k Dc‡hvMx ms¯‹iY c¯‡Zi Kv‡R GB wb‡`wkKv¸‡jvi Kwc msMn Ki‡Z WIPOÔi m‡½ Gme cwZôvb‡K †hvMv‡hv‡Mi Ab‡iva Kiv n‡"Q|

Kwgj Bw`m
gnv cwiPvjK, wek †gav m¤ú` ms¯v

m wP

	cô v
1. †c‡U›U	3
2. Kx f v‡e †c‡U›U cv I qv hwq	16
3. we‡`‡k †c‡U›U wbeÜb	30
4. †c‡U›UKZ chw³i ewYwR¨KxKiY	34
5. †c‡U›U KvhKixKiY	39

1. †c‡U›U

†c‡U›U Kx

†Kv‡bv **D™ve‡bi** Rb¨ ivó c`Ë GK‡PwUqv AwaKvi n‡"Q †c‡U›U, †h D™veb **bZb**, †hLv‡b h³ i‡q‡Q †Kv‡bv **D™vebKkj c`‡¶c** Ges †hUv **wkí cwZôv‡b e¨envi Dc‡hvMx|**

GKwU †c‡U›U Gi gwjK‡K Zvi Ab‡gv`b Qvov †c‡U›UKZ D™ve‡bi wfwË‡Z †Kv‡bv cY¨ ev cwµqv ˆZwi, e¨envi, wewµi c¯ve, weµq ev Avg`wbi †¶‡Î Ab¨ mevB‡K cwZnZ ev _vgv‡bvi **GK‡PwUqv AwaKvi** c`vb K‡i| GKwU †Kv¤úvwbi Rb¨ †c‡U›U n‡"Q bZb †Kv‡bv cY¨ ev cwµqvi Ici GK"QÎZv eRvq ivLvi, GKwU `p evRvi Ae¯vb Dbq‡bi Ges jvB‡mwÝs‡qi gva¨‡g AwZwi³ DcvR‡bi †¶‡Î **kw³kvjx GKwU e¨emvwqK Uj|** KwiMixfv‡e RwUj †Kv‡bv c‡Y¨ (†hgb, K¨v‡giv, †gvevBj †dvb, ev †gvUiMwo) GKwaK D™veb h³ _vK‡Z cv‡i, †h¸‡jv GKwaK †c‡U‡›Ui gva¨‡g miw¶Z Ges G †c‡U›U¸‡jvi gwjK nqZ wfb wfb e¨w³ ev cwZôvb|

†c‡U›U Ab‡gv`b †`q †Kv‡bv †`‡ki **RvZxq †c‡U›U Awdm** ev GK AÂjf³ †`k¸‡jvi †¶‡Î **AvÂwjK †c‡U›U Awdm|** GKwU wbw`ó mg‡qi Rb¨ GUv c‡hvR¨ _v‡K, †c‡U›U Av‡e`b cÎ Rgv †`qvi ZwiL †_‡K mvaviYZ **20 eQi chš**, hw` msi¶‡bi Rb¨ c‡hvR¨ wd mgqgZ cwi‡kva Kiv nq| †c‡U›U n‡"Q †f**Š‡Mwjk GjvKv wfwËK AwaKvi**, msw`ké †`k ev AÂ‡ji †fŠ‡MwjK mxgvbvi g‡a¨ GUv mxgve×|

†c‡U›U c`Ë GB GK"QÎ AwaKv‡ii wewbg‡q, †c‡U›U Av‡e`b c‡Î D™veb m¤ú‡K we¯wiZ, h_vh_ Ges cYv½ wjwLZ weeiY Dc¯vc‡bi gva¨‡g memvavi‡Yi Rb¨ **D™vebwU Db¥³ Kiv** eva¨ZvgjK| gÄiKZ †c‡U›U Ges, A‡bK †`‡k, †c‡U›U Av‡e`b cÎ miKwi GKwU Rvbvj ev †M‡R‡U cKvk Kiv nq|

eØ` IVv cvbxqi †¶‡Î GKwU I‡cbvi (gL †Lvjvi hš) c‡qv‡Mi avivYwU cKvk K‡ib Av‡RwUbvi D™veK Û‡Mv Awj‡fiv, †ivev‡ZvKviWb Ges G‡`vqv` dvbv‡›`R| 20wUi I †ewk †`‡k GB hšwUi †c‡›U›U i‡q‡Q| D™veK‡`i cwZwôZ †Kv¤úvwb †W‡¯vi‡RU †UWgv‡Ki Aax‡b GB cY¨wUi weke¨vcx ewYwR¨KxKiY Kiv n‡q‡Q|

†Kvixq †gvUimvB‡Kj †nj‡gU Drcv`K cwZôvb GBP †R wm Zv‡`i AmvaviY mwókxj wWRvB‡bi †nj‡g‡Ui Rb¨ weke¨vcx 42wU †c‡U‡›Ui gwjK| idZwb evRv‡i AmvaviY mvdj¨ †`wL‡q‡Q cwZôvbwU †hLv‡b Zv‡`i evRvi †kqvi 95%| GBP †R wm Zv‡`i †gvU wewµi 10 kZvsk M‡elYv I Dbq‡b e¨q K‡i Ges mwókxj wWRvB‡bi cwZ Amæe ¸i"Z †`q, †nj‡gU wk‡í mvd‡j¨i †¶‡Î †hUv Ab¨Zg we‡eP¨ welq|

D™veb Kx?

†c‡U›U cwifvlvq, GKwU **D™veb** (Bb‡fbkb) n‡"Q †Kv‡bv **KwiMix mgm¨vi bZb Ges Kkjx mgvavb|** Zv †mB D™veb n‡Z cv‡i m¤úY bZb GKwU hš (wWfvBm), cY¨, Dcvq ev c×wZ A_ev n‡Z cv‡i GKwU cwiwPZ cY¨ ev cwµqvi **AwZwi³ ev ewaZ ms‡hvRbv|** Avgv‡`i cKwZ‡Z Aw¯Z i‡q‡Q Ggb wKQ nVvr L‡R †c‡jB Zv‡K D™veb ejv hv‡e bv; gvb‡li chvß cwigvY weP¶YZv, mwókxjZv I D™veb KkjZv _vK‡Z n‡e †mLv‡b|

AvR‡Ki w`‡bi AwaKvsk D™veb¸‡jv hw` I cPi cwikg, M‡elYv I `xN‡gqv`x wewb‡qv‡Mi dmj, Zel A‡bK mnR I m¯v KwiMix Dbq‡bi D™veK ev †Kv¤úvwb¸‡jv evRv‡i Amvavi Y mvdj¨ †`wL‡q Avm‡Q|

bZb ce‡Zi ¶gZv

ÔD™vebÕ (Bb‡fbkb) Ges Ôbe ceZbÕ (B‡bv‡fkb) GB `ÕwU wel‡qi g‡a¨ cv_K¨ †evSvUv †ek Ri"wi| **D™veb** n‡"Q †Kv‡bv KwiMix mgm¨vi KwiMix mgvavb| GUv n‡Z cv‡i bZb †Kv‡bv mRbkxj aviYv A_ev Kvh¶g g‡Wj ev ¶` ms¯‹iY (†cv‡UvUvBc)| **Ôbe ceZbÕ** -Gi A_ n‡"Q D™veb‡K wecYb‡hvM¨ cY¨ ev cwµqvq i¦cvši| †Kv¤úvwb¸‡jv †Kb bZb cY¨ ev cwµqv ceZb K‡i Zvi cavb KviY¸‡jvi g‡a¨ i‡q‡Q :

- LiP evPv‡Z Ges Drcv`b ¶gZv Dbq‡b Drcv`b cwµqvi AvawbKvqb NUv‡Z;
- †fv³v‡`i Pvwn`v ciY Ki‡e Ggb bZb cY¨ ceZb;
- cwZ‡hwM‡`i Zjbvq GwM‡q _vK‡Z Ges/A_ev evRvi †kqvi evov‡Z;
- e¨emvwqK cwZôvb I Gi MvnK‡`i cKZ I D`xqgvb Pvwn`v ci‡Y chw³i Dbqb wbwðZ Ki‡Z;
- Ab¨ †Kv¤úvwbi chw³i Ici chw³MZ wbfikxjZv Kgv‡Z|

AvR‡Ki w`‡bi A_bxwZ‡Z, GKwU †Kv¤úvwbi Af¨š‡i be ceZb e¨e¯vcbvi Rb¨ †c‡U›U e¨e¯v m¤ú‡K fv‡jv aviYv c‡qvRb| †Kv¤úvwbi wbR¯ mwókxj ¶gZv †_‡K m‡ev"P mweav jvf, Ab¨vb¨ †c‡U›U aviK †Kv¤úvwbi m‡½ jvfRbK Askx`wiZ cwZôv Ges Ab¨ †Kv¤úvwbi gwjKvbvaxb chw³i Abb‡gv`Z e¨envi Gwo‡q hvIqv wbwðZ Ki‡ZB GUv c‡qvRb| G mg‡qi A‡bK be ceZb¸‡jv †ek RwUj Ges †ek K‡qKwU †c‡U›UKZ D™ve‡bi Ici wfwË K‡i wbwgZ, †h¸‡jvi gwjK wfb wfb †Kv¤úvwb|

www.wipo.int/sme/

†Kb Avcbvi D™veb †c‡U›U Kivi K_v we‡ePbv Ki‡eb?

c‡Y¨i ¯í‡gqv`x Pµ Ges µgeagvb cwZ‡hwMZv †Kv¤úvwb¸‡jv‡K bZb wKQ ceZb Ki‡Z Ges/ev Ab¨ †Kv¤úvwb¸‡jvi be ceZb ¸‡jv e¨envi Ki‡Z cPÛ Pvc mwó K‡i, †hb Af¨šixY I idZwb evRv‡i cwZ‡hwMZvgjK nIqv I _vKv hvq| mwókxj †Kv¤úvwb¸‡jvi Rb¨ GKwU P¨v‡jwÄs, SwKcY Ges MwZgq e¨emwqK cwigÛ‡ji g‡a¨ mgw× AR‡bi †¶‡Î †c‡U›U c`Ë GK‡PwUqv AwaKvi LeB ¸i"ZcY n‡Z cv‡i| D™veb †c‡U›U Kivi gj KviY¸‡jvi g‡a¨ i‡q‡Q :

- **`p evRvi Ae¯vb Ges cwZ‡hwMZvgjK mweav:** †c‡U›U Gi gwjK‡K †c‡U›UKZ D™veb Ab¨ KvD‡K ewYwR¨Kfv‡e e¨env‡ii ¶gZv wbwl× Kivi GK‡PwUqv AwaKvi c`vb K‡i, Gfv‡e AbKiYKvix ev wd ivBWvi‡`i (†Kv¤úvwbi mbvg A‰eafv‡e e¨envi Kvix) †_‡K mó Awbðqv, SwK I cwZ‡hwMZv nvm K‡i| hw` Avcbvi †Kv¤úvwb GKwU †c‡U›UKZ gj¨evb D™ve‡bi gwjK nq ev GUv e¨env‡ii Ab‡gv`b cvq Zvn‡j GKB D™veb we‡q Ab¨ cwZ‡hwM‡`i Rb¨ GUv GKwU evRvi cwZeÜKZv mwó Ki‡Z cv‡i| mswkó evRv‡i AMMY¨ cwZ‡hvMx n‡Z †c‡U›U mvnvh¨ K‡i|
- **wewb‡qv‡Mi Ici D"P gbvdv ev wiUvb|** Avcbvi †Kv¤úvwb hw` M‡elYv I Dbq‡b h‡_ó cwigvY mgq I A_ e¨q K‡i _v‡K, D™vebKZ D™ve‡bi †c‡U›U mi¶v †m‡¶‡Î LiP Z‡j Avb‡Z Ges wewb‡qv‡Mi Ici D"P gbvdv †c‡Z mvnvh¨ Ki‡Z cv‡i|
- **†c‡U›U jvB‡mÝ ev ¯Zwb‡qv‡Mi gva¨‡g AwZwi³ Avq:** †Kv¤úvwbi Rb¨ AwZwi³ Av‡qi Drm ˆZwi‡Z, †c‡U›U gwjK wn‡m‡e D™ve‡bi Ici Avcbvi GB AwaKvi A‡_i wewbg‡q ev iq¨vjwUi wewbg‡q Ab¨ KvD‡K jvB‡mÝ w`‡Z cv‡ib| GKwU †c‡U›U wewµi ev (¯Zwb‡qvM) A_ n‡"Q gwjKvbv n¯vši, Ab¨w`‡K jvB‡mÝ c`v‡bi A_ n‡"Q wbw`ó k‡Zi wfwË‡Z †Kej D™veb e¨env‡ii Ab‡gv`b c`vb|
- **µm-jvB‡mwÝs‡qi gva¨‡g Ab¨vb¨ chw³i e¨envi:** Ab¨ †Kv‡bv †Kv¤úvwbi chw³ hw` Avcbvi †Kv¤úvwb e¨envi Ki‡Z Pvq †m‡¶‡Î µm-jvB‡mwÝs Pw³ mg‡SvZv K‡i Avcwb Avcbvi †Kv¤úvwbi wbR¯ †c‡U›U Ab¨ †Kv¤úvwb‡K e¨env‡ii AbgwZ w`‡Z cv‡ib| Pw³‡Z DwjwLZ k‡Zi wfwË‡Z Avcbviv G‡K A‡b¨i GK ev GKwaK †c‡U›U e¨env‡i m¤§Z n‡Z cv‡ib|
- **bZb evRv‡i c‡ek:** Ab¨ KvD‡K †c‡U‡›Ui (A_ev GgbwK S‡j _vKv †c‡U›U Av‡e`‡bi †¶‡Î I) jvB‡mÝ c`vb bZb evRv‡i c‡e‡ki m‡hvM mwó Ki‡Z cv‡i, Ab¨fv‡e †hUv m¤e nw"Qj bv| GUv Ki‡Z n‡j, †mB D™vebwU Aek¨B mswkó we‡`‡ki evRv‡i miw¶Z n‡Z n‡e|

- **†c‡U›U j•N‡bi SwK nvm:** †c‡U‡›Ui gva¨‡g Avcwb Ab¨ KvD‡K GKB D™veb †c‡U›U Kivi ¶gZv wbwl× Ki‡Z cvi‡eb Ges Avcbvi c‡Y¨i ewYwR¨KxKi‡Yi mgq Ab¨‡`i AwaKvi j•N‡bi m¤¢vebvl nvm Ki‡Z cvi‡eb| †c‡U›U ¯qs Ôe¨envi‡ii ¯vaxbZvÕ c`vb K‡i bv, GUv GKB ev Abi¡c D™veb Ab¨ KvD‡K †c‡U›U Kivi AwaKvi wbwl× K‡i Ges †hŠw³K Bw½Z †`q †h, †h D™vebwU Avcwb †c‡U›U K‡i‡Qb Zv bZb Ges Ôcvqi AvUÕ †_‡K D‡jŁ‡hvM¨fv‡e wfb (Ôcvqi AvUÕ wel‡q Av‡iv †`Lb côv 12)|
- **Ab`vb jv‡fi ¶gZv evovq Ges/ev †hŠw³K m‡` gjab MVb K‡i:** †c‡U‡›Ui gwjKvbv (A_ev Ab¨ †Kv¤úvwbi †c‡U›U e¨envi‡ii jvB‡mÝ) GKwU cY¨ evRviRvZ Kivi c‡qvRbxq gjab †RvMv‡oi ¶gZv evov‡Z cv‡i| wKQ wKQ Lv‡Z (†hgb, ˆRe chw³) †fÂvi K¨wcUwj ÷‡`i AvMnx K‡i Zj‡Z cvq memgq GKwU kw³kvjx †c‡U›U †cvU‡dwj li c‡qvRb nq|
- **AbKiYKvix Ges wd ivBWvi‡`i wei“‡× c`‡¶c †bqvi kw³kvjx GKwU A¯:** †c‡U›U c`Ë GK"QÎZv h_vh_fv‡e KvhKi Ki‡Z gv‡S gv‡S gvgjv Kivi c‡qvRb nq ev hviv Avcbvi †c‡U›U AwaKvi f½ Ki‡Q Zv‡`i‡K Avcbvi †c‡U›U wel‡q AeMZ Kivi c‡qvRb nq| †c‡U›U gwjKvbv †c‡U›UKZ D™ve‡bi bKjKvix ev AbKiYKvix‡`i wei“‡× mdj AvBbMZ c`‡¶c †bqvi ¶gZv evovq|
- **Avcbvi cwZôv‡bi BwZevPK fvegwZ ˆZix:** e¨emwqK Askx`vi, wewb‡qvMKvix, †kqvi‡nvìvi Ges †fv³viv †c‡U›U †cvU‡dwj l‡K we‡ePbv K‡i _v‡K Avcbvi †Kv¤úvwbi D"P gvÎvi we‡klÁ Ávb, we‡klvqY Ges chw³MZ ¶gZvi ewnt cKvk wn‡m‡e| Znwej MV‡b, e¨emwqK Askx`vi L‡R †c‡Z Ges Avcbvi †Kv¤úvwbi †cvdvBj I evRvi gj¨ evov‡Z GUv mnvqK fwgKv ivL‡Z cv‡i| Rbmvavi‡Yi Kv‡Q bZb chw³i ceZK wn‡m‡e wb‡R‡`i Dc¯vcb Ki‡Z wKQ wKQ †Kv¤úvwb weÁvc‡b Zv‡`i †c‡U›U ZwjKv cKvk K‡i _v‡K|

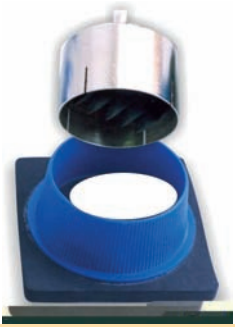

†c‡U›U bs BD Gm 2002137433
KvP I wmivwg‡Ki Ici wQ` Kivi Kv‡R e¨eüZ GKwU bZb wWj weU-Gi †c‡U›U gwjK n‡"Qb †ci“i D™veK †nv‡m wf`vj gwUbv| †c‡U‡›Ui gva¨‡g wZwb cY¨wU mivmwil jvB‡mwÝs‡qi gva¨‡g iq¨vjwUi wfwË‡Z evRviRvZ Ki‡Z m¶g n‡q‡Qb|

AvcbvI cY¨ mi¶vq Ab¨vb¨ AvBbMZ mweav¸‡jv wK wK?

GB wb‡`wkKvi Av‡jvPbvi welqe¯ n‡”Q **†c‡U›U|** Z‡e, mswkó c‡Y¨i Ici wfwË K‡i, Ab¨vb¨ †gavm¤ú` AwaKvi¸‡jvI †Kv‡bv Kkjx c‡Y¨i wewfb ˆewkó¨ mi¶vi Kv‡R Dch³ n‡Z cv‡i| G¸‡jvi g‡a¨ Ašf³ i‡q‡Q :

- **BDwUwjwU g‡Wj** (¯í‡gqv`x †c‡U›U, †cwU †c‡U›U ev bZb cZebgjK †c‡U›U wn‡m‡e I cwiwPZ)| A‡bK †`‡k, we`¨gvb c‡Y¨i wKQ ewaZ D™veb ev †QvULv‡Uv Awf‡hvRb BDwUwjwU g‡W‡ji Aax‡b mi¶v‡hvM¨ (10bs côvq e· AvB‡Ug †`Lb)|
- **†UW wm‡µU** (e¨emvwqK †MvcbxqZv) †Mvcb e¨emvwqK Z_¨ †UW wm‡µ‡Ui gva¨‡g mi¶v Kiv hvq, hZ¶Y chš : Ñ mvaviYZ Ab¨‡`i Kv‡Q GUv ARvbv, hviv G RvZxq Z_¨ wb‡q KvR K‡ib; Ñ Gi ewYwR¨K gj¨ i‡q‡Q KviY GUv †Mvcbxq; GesÑ GUv †Mvcb ivL‡Z gwjK †hšw³K c×wZ MnY K‡i‡Q (D`vniY wn‡m‡e, ÔwbW-U-‡bvÕ wfwË‡Z G RvZxq Z‡_¨ c‡ekwaKvi mxwgZ Kiv Ges †Mvcbxq ev cKvk bv Kiv kxlK Pw³ ¯v¶i Kiv| 9 bs côvq e· AvB‡Ug †`Lb)
- **BÛw÷qvj wWRvBb|** †Kv‡bv c‡Y¨i †kvfv eaK ev bv›`wbK ˆewk‡ó¨i Ici GK”Q Î AwaKvi cvIqv hvq BÛw÷qvj wWRvBb mi¶vi gva¨‡g| ‡Kvb †Kvb †`‡k GUv ÔwWRvBb †c‡U›UÕ bv‡gI cwiwPZ|
- **†UWgvK:** GK †Kv¤úvwbi cY¨ †_‡K Av‡iK †Kv¤úvwbi cY¨ Avjv`v Kivi Kv‡R e¨eüZ ¯vZš¨gjK cZx‡Ki Ici GK‡PwUqv AwaKvi c`vb K‡i †UWgvK|
- **KwcivBU Ges m¤úwKZ AwaKvi|** †gŠwjK mvwnZ¨ I ˆkwíK mwóKg KwcivBU Ges mswkó AwaKv‡ii gva¨‡g miw¶Z ivLv hvq| we¯Z cwim‡ii KvR KwcivB‡Ui AvIZvaxb, Gi g‡a¨ i‡q‡Q Kw¤úDUvi †cvMvg I Gi Ašf³ (11bs côvq e· AvB‡Ug †`Lb)|
- **bZb Dw™‡`i RvZ|** A‡bK †`‡k, bZb Rv‡Zi Dw™‡`i cRbb cwZôvb Ôcw›U weWvm ivBUmÕ-Gi AvKv‡i mi¶v †c‡Z cv‡i, †h bZb RvZ Awfbe Z, ¯vZš¨Zv, mgRvZxqZv I w¯wZkxjZvi eva¨evaKZv ciY K‡i Ges †hUv‡K GKwU Dch³ bv‡g AvL¨wqZ Kiv hvq| bZb Dw™` Rv‡Zi mi¶v welqK AwZwi³ Z‡_¨i Rb¨ †`Lb *www.upov.int* I‡qemvBU|
- **Bw›U‡M‡UW mvwK‡Ui †jAvDU-wWRvBb (ev U‡cvMvwd):** gvB‡µvwPc Ges †mwgKÛv±i wP‡c e¨eüZ GKwU Bw›U‡M‡UW mvwK‡Ui †gŠwjK †jAvDU-wWRvB‡bi (ev U‡cvMvwd) mi¶vI Avcwb jvf Ki‡Z cv‡ib| G RvZxq mi¶vi AvIZv †jAvDU-wWRvBb m¤wjZ †Kv‡bv c‡Y¨i Povš ms¯‹iY chš we¯Z|

hw` †Kv‡bv D™veb †c‡U›U‡hvM¨ nq Zvn‡j wK †c‡U›U mi¶vi Av‡e`b Kiv DwPZ?

me mgq bv| hw` †Kv‡bv D™veb †c‡U›U‡hvM¨ nq, Zvn‡j Gi A_ GB bq †h, GUv ewYwR¨Kfv‡e I mdj chw³ ev cY¨| G Kvi‡Y, †c‡U›U Av‡e`b cÎ `wL‡ji c‡e G D™ve‡bi mweav-Amweav we‡ePbv Kiv Ges Gi m¤ve¨ weKí welq¸‡jv we‡kl‡Y Kiv Ri“wi n‡q `vovq| †c‡U›U Ab‡gv`‡bi welqwU n‡Z cv‡i e¨qeûj Ges Gi Ab‡gv`b, i¶Yv‡e¶Y I KvhKixKiY n‡Z cv‡i †ek Kómva¨| †c‡U›U Av‡e`b cÎ `wLj Kiv n‡e wK n‡e bv Zv wbZvšB GKwU e¨emwqK wm×vš| GB wm×vš wbfi K‡i ewYwR¨Kfv‡e jvfRbK mi¶v AR‡bi m¤ve¨Zvi Ici, A_vr Gi e¨emwqK e¨envi †_‡K †hb h‡_ó cwigvY gbvdv ARb Kiv hvq|

GKwU †c‡U›U Av‡e`b `wLj Kiv n‡e wK n‡e bv †m wm×vš wb‡Z wb‡Pi welq¸‡jv we‡ePbvq †bqv c‡qvRb :

- D™ve‡bi Rb¨ Dch³ evRvi i‡q‡Q wK?
- Avcbvi D™ve‡bi weKí¸‡jv wK wK Ges wKfv‡e †m¸‡jv Avcbvi D™ve‡bi m‡½ Zjbv‡hvM¨?
- we`¨gvb †Kv‡bv c‡Y¨i DbwZ mva‡b ev bZb GKwU cY¨ Dbq‡b D™vebwU wK ¸i“ZcY? hw` n‡q _v‡K, Zvn‡j GUv wK Avcbvi †Kv¤úvwbi e¨emwqK †KŠk‡ji m‡½ m½wZcY?
- m¤ve¨ jvB‡mÝ MnxZv ev wewb‡qvMKvix i‡q‡Q wK, hviv G D™veb evRviRv‡Z mnvqZv Ki‡Z AvMnx?
- Avcbvi e¨emv I cwZ‡hvMx cwZôvb¸‡jvi Kv‡Q GB D™veb KZUv gj¨evb?
- Avcbvi cY¨ †_‡K D™vebwU wK mn‡R Ôwifvm BwÄwbqwisÕ Kiv hvq ev Gi †_‡K Ab¨ wWRvBb ˆZwi (wWRvBb A¨vivDÛ) wK mnR?
- Avcwb †hUv D™veb K‡i‡Qb †mUv D™veb I †c‡U›U Kivi m¤ebv Ab¨‡`i, we‡kl K‡i cwZ‡hvwM‡`i, KZUK?
- evRv‡i GK‡PwUqv Ae¯vb †_‡K cvß m¤ve¨ gbvdv wK †c‡U›U LiP †cvlv‡Z cvi‡e? (†c‡U›U LiP wel‡q †`Lb côv 20)
- GK ev GKwaK †c‡U‡›Ui gva¨‡g D™ve‡bi †Kvb w`K¸‡jv mi¶v Kiv hv‡e, Gi AvIZv KZUv we¯Z n‡Z cv‡i Ges GUv wK ewYwR¨Kfv‡e jvfRbK mi¶v c`vb Ki‡e?
- †c‡U›U AwaKvi j•N‡bi NUbv wPwýZ Kiv wK mnR n‡e Ges †c‡U›U KvhKi Ki‡Z mgq I Aw_K m¤ú` wewb‡qv‡M Avcwb wK c¯Z?

1994 mv‡j A‡÷wjqvi †Kv¤úvwb AvBwUGj Ki‡cv‡ikb Zv‡`i c_g c‡Y¨i Rb¨ BDwUwjwU g‡W‡ji Av‡e`b K‡i| cY¨wU n‡"Q ¯Zš¨ wWRvB‡bi GKwU f¨v‡mj ev cvÎ †hLv‡b i³ msM‡ni mP¸‡jv i³c`vbKvixi kixi †_‡K i³ †bqvi ci ¸wU‡q hvq| GB BDwUwjwU g‡WjwU cieZx mg‡q †c‡U‡›U i¦cvši Kiv nq| †Wvbvi‡Kqvi® †UWgv‡Ki Aax‡b evRviRvZ Kiv GB cY¨wU Af¨šixY I ˆe‡`wkK evRv‡i `vi“b mvdj¨ †c‡q‡Q Ges ghv`vm¤úb A‡bK ci¯wi wR‡Z‡Q|

†c‡U›U ebvg †MvcbxqZv

Avcbvi D™veb hw` †c‡U›U‡hvM¨Zvi Avek¨KZv ciY K‡i (10bs côv †`Lb), †m‡¶‡Î Avcbvi †Kv¤úvwb‡K GKwU wm×vš wb‡Z n‡e; D™vebwU‡K †UW wm‡µU wn‡m‡e †d‡j ivLv, GUv †c‡U›U Kiv A_ev GUv D‡bÿPb Kivi gva¨‡g wbwðZ Kiv †h, Ab¨ †KD GUv †c‡U›U Ki‡Z cvi‡e bv (mvaviYZ wW‡dbwmf cvewj‡Kkb wn‡m‡e cwiwPZ), Gfv‡e GUv memvavi‡Yi e¨env‡ii Rb¨ Db¥³ Kiv|

Amva cwZ‡hwMZvi wei"‡× cYxZ AvB‡bi Aax‡b †UW wm‡µ‡Ui mi¶v cvIqv †h‡Z cv‡i, Z‡e GUv wbfi K‡i Avcbvi wbR †`‡ki AvBb e¨e¯vi Ici| GK ev GKwaK AvB‡bi wbw`ó avivi gva¨‡g ev †Mvcb Z_¨ mi¶vi AvB‡bi gva¨‡g A_ev, Kgx, civgkK, MvnK, e¨emvwqK Askx`vi A_ev G¸‡jvi GKwaK c‡¶i g‡a¨ ¯v¶wiZ Pw³i avivi gva¨‡g GB mi¶v cvIqv †h‡Z cv‡i|

†UW wm‡µU (e¨emwqK †MvcbxqZv) mi¶vi K‡qKwU mweav n‡"Q :

- †UW wm‡µ‡Ui †¶‡Î wbeÜb wdÔi c‡qvRb nq bv;
- †UW wm‡µU mi¶vi †¶‡Î Z_¨ cKv‡ki ev miKvwi Awd‡mi gva¨‡g wbeÜ‡bi c‡qvRb nq bv Ges D™vebI AcKvwkZ †_‡K hvq;
- †UW wm‡µU mi¶v wbw`ó mg‡qi g‡a¨ mxgve× bv;
- †UW wm‡µ‡Ui Zvr¶wYK KvhKwiZv i‡q‡Q|

†UW wm‡µU wn‡m‡e D™veb mi¶vi Amweav¸‡jv n‡"Q :

- †MvcbxqZ_¨ hw` GKwU bZb cewZZ c‡Y¨i g‡a¨ h³ _v‡K, Zvn‡j Ab¨iv GUv‡K Ôwifvm BwÄwbqwisÕ Ki‡Z m¶g n‡Z cv‡i, †MvcbxqwelqwU Awe®‹vi Ki‡Z cv‡i Ges Gfv‡e †mUv e¨env‡ii AwaKvi cvq;
- †MvcbxqZ_¨ AmgxPxbfv‡e ARb, e¨envi ev cKv‡ki wei"‡×B †Kej †UW wm‡µU mi¶v KvhKi;
- †MvcbxqZ_¨ hw` memvavi‡Yi Rb¨ D‡bÿPb Kiv nq Zvn‡j †h †mUv cv‡e †m Zv e¨envi Ki‡Z cvi‡e;
- †UW wm‡µU KvhKixKiY †ek Kómva¨, †h‡nZ †c‡U‡›Ui Zjbvq Gi mi¶vi gvÎv †ek `ej; Ges
- GKwU †UW wm‡µU Ab¨‡`i gva¨‡g †c‡U›UKZ n‡Z cv‡i, hviv †hŠw³K Dcv‡q GKB D™veb ¯vaxbfv‡e Dbqb K‡i‡Q|

D™veb mi¶vi weKí Dcvq wn‡m‡e †c‡U›U I †UW wm‡µU‡K †`Lv n‡jI, Zviv cvqk G‡K Ac‡ii cwiciK| Gi KviY n‡"Q, †c‡U›U Awdm KZK cKwkZ nIqvi AvM chš †c‡U›U Av‡e`b †Mvcb _v‡K| ZvQvov, wKfv‡e GKwU †c‡U›UKZ D™veb mdjfv‡e wbR ¯v‡_ e¨envi Kiv hvq †m welqK Ávb ev Rvbv‡kvbv cvqk †UW wm‡µU wn‡m‡e †Mvcb ivLv nq|

wK wK †c‡U›U Kiv hv‡e?

†c‡U›U mi¶vi †hvM¨ nIqvi †¶‡Î GKwU D™veb‡K Aek¨B KZ¸‡jv eva¨evaKZv ciY Ki‡Z nq| G¸‡jvi g‡a¨, we‡kl K‡i, `weKZ D™vebwU n‡e :

- †c‡U›U‡hvM¨ welqe¯i Ašf³ (11bs côv †`Lb)
- bZb (Awfbe‡Zi Avek¨KZv, 12bs côvq †`Lb)
- D™vebKkj c`‡¶c m¤úb (¯úóZ AcZxqgvb eva¨evaKZv, 12bs côv †`Lb)
- wkíKviLvbvq e¨envi‡ii Dc‡hvMx (BDwUwjwU Avek¨KZv, côv 13);Ges
- †c‡U›U Av‡e`bc‡Î ¯úó I cYv½gvÎvq cKwkZ (cKv‡ki eva¨evaKZv, côv 13)

Gme Avek¨KZv Rvbv ‡evSvi me‡P‡q KvhKi Dcvq n‡"Q Avcbvi AvM‡ni †¶Î¸‡jv‡Z Ab¨ cwZôvb¸‡jv †Kvb D™veb¸‡jv †c‡U›U K‡i‡Q †m¸‡jv cix¶v Kiv| GUv Kivi Rb¨, Avcwb †c‡U›U WvUv‡e‡Ri mnvqZv wb‡Z cv‡ib (†c‡U›U WvUv‡eR m¤ú‡K AwZwi³ Z‡_¨i Rb¨ †`Lb côv 16 I 17)|

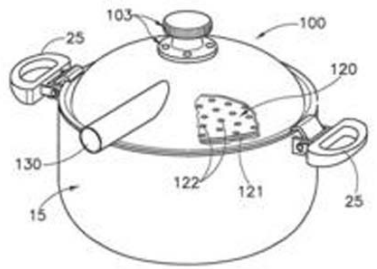

AvšRwZK Av‡e`b bs wc wm wU/AvB wU 2003/000428 ev®úwqZ Zi‡ji gva¨‡g Lv`¨ ev cvbxq ˆZwii ˆZRmcÎ

BDwUwjwU g‡Wj

BDwUwjwU g‡W‡ji K‡qKwU ˆewkó¨ n‡"Q :

- BDwUwjwU g‡Wj Ab‡gv`‡bi kZ¸‡jv ZZUv K‡Vvi bv, †h‡nZ GLv‡b ÔD™veb Kkj c`‡¶cÕ eva¨evaKZv ciY Kiv nq ¯ígvÎvq ev G‡Kev‡iB Dcw¯Z _v‡K bv;
- BDwUwjwU g‡Wj Ab‡gv`b Kvhwewa mvaviYZ †c‡U‡›Ui Zjbvq `"ZZi I mij;
- Ab‡gv`b jvf I i¶Yv‡e¶Y wd mvaviYZ †c‡U‡›Ui Zjbvq Kg;
- BDwUwjwU g‡W‡ji m‡ev"P m¤ve¨ †gqv` mvaviYZ †c‡U‡›Ui Zjbvq Kg;
- wKQ †`‡k, BDwUwjwU g‡Wj wbw`ó chw³i †¶‡Î mxgve× _vK‡Z cv‡i Ges †Kejgvî c‡Y¨i †¶‡ÎB GUv c‡hvR¨ n‡Z cv‡i (†Kv‡bv cwµqvi †¶‡Î bq); Ges
- mvaviYZ, GKwU BDwUwjwU g‡Wj Av‡e`bcÎ ev gÄiKZ BDwUwjwU g‡Wj GKwU cYv½ †c‡U›U Av‡e`bc‡Î i¡cvši Kiv hvq|

www.wipo.int/sme/

†c‡U›U‡hvM¨Zvi welqe¯ Kx?

AwaKvsk †`k ev AvÂwjK †c‡U›U AvB‡b, †c‡U›U‡hvM¨Zvi welqe¯ †bwZevPK fv‡e msÁwqZ Kiv n‡q‡Q| A_vr wK wK †c‡U›U Kiv hv‡ebv ZviB D‡jŁ i‡q‡Q AvB‡b| hw` I †`k †f‡` G Zwj Kvi g‡a¨ h‡_ó cv_K¨ i‡q‡Q, Z‡e †c‡U›U‡hvM¨Zvi AšÍf³ bq Ggb K‡qKwU Lv‡Zi D`vniY n‡"Q :

- Awe®vi Ges ˆeÁwbK ZË;
- bv›`wbK mwó;
- Kgmw P, AvBb Ges gvbwmK Kg m¤úv`‡bi c×wZ;
- cw_ex‡Z cvKwZK fv‡e N‡U _v‡K Ggb e¯i nVvr Awe®vi;
- D™vebmgn †h¸‡jv memwavi‡Yi gj¨‡eva ˆbwZKZv I ¯v‡¯¨i Rb¨ ¶wZi cfve ivL‡Z cv‡i;
- gvbl I Ab¨vb¨ cvYxi wPwKrmvi Kv‡R e¨eüZ WvqvMbw÷K, †_iwcDwUK ev kj¨ c×wZ;
- gvB‡µv AMwbRg e¨ZxZ Dw™` I cvYx Ges we‡kl K‡i, A‰Re I AbRxe cwµqv e¨ZxZ, Dw™` I cvYx Drcv`‡bi ˆRweK cwµqv; Ges Kw¤úDUvi †cvMvg|

Kw¤úDUvi mdUIq¨vi mi¶v

A‡bK †`‡k, MwYwZK A¨vjMwi`g, †hUv GKwU Kw¤úDUvi †cvMv‡gi D"P-Kvh¶gZvi wfwË, **†c‡U‡›Ui** gva¨‡g mi¶v Kiv †h‡Z cv‡i,Ab¨w`‡K Ab¨ †`k¸‡jv‡Z GUv **A‡c‡U›U‡hvM¨ welqe¯** wn‡m‡e †c‡U‡›Ui evB‡i| GB †`kM‡jvi K‡qKwU‡Z, mdUIq¨vi m¤úwKZ D™veb †c‡U›U‡hvM¨, Z‡e kZ _v‡K †h GUv m‡evrKó **KwiMix Ae`vb** e‡j we‡ewPZ n‡e| Avcbvi †`‡k Kw¤úDUvi mdUIq¨v‡ii †c‡U›U‡hvM¨Zv wel‡q AwZwi³ Z‡_¨i Rb¨ wbR †`‡ki RvZxq ev AvÂwjK †c‡U›U Awd‡m †hvMv‡hvM Ki"b (†c‡U›U Awdm¸‡jvi I‡qemvBU Zwj Kvi Rb¨ †`Lb mshw³ 2)|

AwaKvsk †`‡k, Kw¤úDUvi †cvMv‡gi Ae‡R± †KvW Ges †mvm †KvW **KwcivB‡Ui** gva¨‡g mi¶Z ivLv hvq| KwcivBU mi¶vi Rb¨ wbeÜb eva¨ZvgjK bq, wKš Hw"QK wbeÜb m¤e Ges wKQ †`‡k GUv PvIqv n‡q _v‡K| AvIZvi w`K †_‡K †c‡U›U mi¶vi Zjbvq KwcivBU mi¶v mxwgZ, GUv †Kej AvBwWqv ev aviYv cKv‡ki fw½ ev ixwZ‡KB mi¶v †`q, AvBwWqv‡K bq| A‡bK †Kv¤úvwb Zv‡`i Kw¤úDUvi †cvMv‡gi Ae‡R± †KvW KwcivB‡Ui gva¨‡g mi¶Z iv‡L, Ab¨w`‡K †mvm †KvW msi¶Y K‡i **†UW wm‡µU** wn‡m‡e|

D™veb wKfv‡e bZb ev Awfbe e‡j we‡ewPZ nq?

GKwU D™veb ZLbB bZb ev Awfbe n‡e hLb GUv cvqi AvU- Gi Ask wn‡m‡e KvR Ki‡e bv| mvaviYZ, **cvqi AvU** ej‡Z †evSvq mswkó KwiMix Ávb, hv †c‡U›U Av‡e`b `wL‡ji AvM †_‡K we‡ki meÎ memvavi‡Yi Kv‡Q cwiwPZ| Gi g‡a¨ i‡q‡Q, †c‡U›U, †c‡U›U Av‡e`b Ges me ai‡Yi A‡c‡U›UKZ mvwnZ¨|

cvqi Av‡Ui msÁv GK GK †`‡k GK GK iKg| A‡bK †`‡k, we‡ki †h †Kv‡bv ¯v‡b me mvavi‡Yi Kv‡Q wjwLZ AvKv‡i Db¥³ Z_¨B n‡"Q cvqi AvU, Zv †mUv n‡Z cv‡i †gŠwLK †hvMv‡hv‡Mi gva¨‡g, c`k‡bi gva¨‡g ev mvaviY gvb‡li e¨env‡ii gva¨‡g| Gfv‡e bxwZMZfv‡e, ˆeÁvwbK Rvbv‡j †Kv‡bv D™veb cKvk, †Kv‡bv m‡¤§j‡b Dc¯vcb, ewY‡R¨ e¨envi ev †Kv¤úvwbi K¨vUvj‡M e¨envi †mB D™ve‡bi AwfbeZ NwP‡q †d‡j Ges †mUv ZLb A-†c‡U›U‡hvM¨ e‡j we‡ewPZ nq| †c‡U›U Av‡e`bcÎ `wL‡ji c‡e `NUbvekZ D™ve‡bi D‡b¥Pb †iva Kiv AZ¨š Ri"wi| cvqi Av‡U wK wK Ašf³ i‡q‡Q Zv wbavi‡Yi †¶‡Î †hvM¨ GKRb †c‡U›U G‡R‡›Ui mnvqZv †bqv GLv‡b ¸i"ZcY| cvqi Av‡U cvqk Ašf³ _v‡K Ôwm‡µU cvqi AvUÔ †hgb S‡j _vKv AcKwkZ †c‡U›U Av‡e`b cÎ, Z‡e kZ _v‡K †h cieZx mg‡q G¸‡jv cKwkZ n‡e|

D™ve‡b ÔD™vebKkj c`‡¶cÕ KLb we‡ewPZ nq?

GKwU D™ve‡bi m‡½ Bb‡fbwUf †÷c ev D™veb Kkj c`‡¶c (A_ev ¯úóZ AcZxqgvb) RwoZ we‡ewPZ n‡e ZLb, hLb, cvqi AvU we‡ePbvq wb‡q, D™vebwU mswkó chw³ Lv‡Z `¶ †Kv‡bv e¨w³i Kv‡Q ¯úófv‡e cZxqgvb n‡e bv| ¯úóZ AcZxqgvb eva¨evaKZv GUv wbwðZ K‡i †h, mwZ¨Kv‡ii mRbkxj I KkjZvgq mvd‡j¨i †¶‡ÎB †Kej †c‡U›U gÄi Kiv nq, H RvZxq D™ve‡bi †¶‡Î bq †h¸‡jv mswkó wel‡q mvaviY `¶Zv m¤úb †Kv‡bv e¨w³ mn‡RB Abaveb Ki‡Z cv‡i ev eS‡Z cv‡i|

AZx‡Z Av`vj‡Zi Av‡`‡ki wfwË‡Z †Kv‡bv †Kv‡bv †`‡k †hme D™veb¸‡jv h‡_ó D™veb Kkj e‡j we‡ewPZ nqwb, †m¸‡jvi K‡qKwU D`vniY n‡"Q : c‡Y¨i AvKv‡i mvgvb¨ cwieZb; †Kv‡bv cY¨‡K enb‡hvM¨ K‡i †Zvjv; hšvs‡k cwieZb; DcKi‡Y cwieZb; A_ev mgRvZxq hšvsk ev Kvh¶gZvi cwieZb|

†µv‡qwkqvb †Kv¤úvwbi wcfvÔi G»Uev‡qwUK A¨vRvB_gvBwm‡bi Ici †c‡U›U †Kv¤úvwbwU‡K MZ `k‡K wgwjqb wgwjqb Wjvi Av‡qi c_ mMg K‡i‡Q| we‡`wk GKwU eo Ila †Kv¤úvwbi m‡½ mdj jvB‡mwÝs Pw³i wfwË wQj H †c‡U›U|

ÔwkíKviLvbvq e¨envi‡ii m¶gZvÕ ej‡Z Kx †evSvq?

†c‡U›U‡hvM¨ n‡Z n‡j, GKwU D™veb‡K Aek¨B wkíKviLvbv ev e¨emwqK c‡qvR‡b e¨eüZ nIqvi †hvM¨ n‡Z n‡e| GKwU D™veb †Kej ZËMZ wKQ n‡Z cv‡i bv; GUv Aek¨B c‡qvRbxq e‡j we‡ewPZ n‡Z n‡e Ges Gi wKQ e¨envwiK mweav _vK‡e| GLv‡b ÔBÛvw÷qvjÕ kãwU we¯Z A‡_ †evSv‡bv n‡"Q, †hUv ew×ewËK ev bv›`wbK KgKvÛ †_‡K m¤úYi|‡c wfb, Gi g‡a¨ i‡q‡Q KwImn Ab¨vb¨ KgKvÛ| wKQ wKQ †`‡k, wkí KviLvbvq e¨envi‡hvM¨Zvi e`‡j †h kZwU _v‡K †mUv n‡"Q BDwUwjwU ev Dc‡hvwMZv| †R‡bwUK wm‡Kv‡qÝ-Gi †c‡U‡›Ui †¶‡Î GB BDwUwjwU eva¨evaKZv LeB ¸i"ZcY, †hLv‡b Av‡e`b Rgv †`qvi mgq Gi Dc‡hvwMZv bv I Rvbv †h‡Z cv‡i|

cKv‡ki Avek¨KZv Kx?

AwaKvsk †`‡ki RvZxq AvBb Abmv‡i, GKwU †c‡U›U Av‡e`b c‡Î D™vebwU Aek¨B ¯úó I cÖYv½fv‡e cKvk Ki‡Z n‡e †hb mswkó KwiMix Lv‡Z `¶ GKRb e¨w³i c‡¶ †mB D™veb cwiPvjbv Kiv m¤e nq| †Kvb †Kvb †`‡k, †c‡U›U AvB‡b D™veK‡K †mB D™vebwU c‡qv‡Mi Ôm‡evrKó DcvqÕ cKvk Ki‡Z nq| gvB‡µvAMwbRg wel‡q †c‡U‡›Ui †¶‡Î, A‡bK †`‡kB gvB‡µvAMwbRg GKwU ¯xKZ wW‡cwRUwi ms¯vq Rgv ivLvi c‡qvRb nq|

cvYx weÁv‡b †c‡U›U

mv¤cwZK eQi¸‡jv‡Z, cvYxweÁv‡b (we‡kl K‡i ˆRe chw³‡Z) †c‡U‡›Ui msL¨v h‡_ó †e‡o‡Q Ges G wel‡q †Kvb¸‡jv †c‡U›U Kiv hv‡e †m wel‡q †`k¸‡jvi g‡a¨ h‡_ó gZ cv_K¨I i‡q‡Q| cvq me †`kB **gvB‡µvAMwbRg** welqK D™veb †c‡U‡›Ui Ab‡gv`b †`q, Z‡e G‡¶‡Î AMwbRg-Gi GKwU bgbv ¯xKZ wW‡cwRUwi ms¯vq Rgv ivL‡Z nq, hLb G AMwbRg mevi Kv‡Q ARvbv Ges h_vh_fv‡e msÁwqZI nqwb| AwaKvsk †`k †c‡U›U‡hvM¨Zvi welqe¯ †_‡K **Dw™`I cvYx** ev`w`‡q _v‡K, Z‡e †Kv‡bv †Kv‡bv ˆRweK Dcv`vb †c‡U‡›Ui Ab‡gv`b †`q hLb †mB Dcv`vb‡K Zvi ¯vfweK (cvKwZK)

cwi‡ek †_‡K Avjv`v Kiv nq I cwiï× Kiv nq ev †Kv‡bv KwiMix cwµqvi gva¨‡g ˆZwi Kiv hvq| RvZxq AvB‡b Av‡iv wbw`ó †kYxi D™ve‡bi Zwj Kv i‡q‡Q †h¸‡jv †c‡U›U Kiv bvI †h‡Z cv‡i, †hgb gvbe †Kwbs cwµqv ev gvb‡li †R‡bwUK cwiPq cwieZ‡b wb‡qwRZ †Kv‡bv cwµqv|

**Dw™‡`i bZb RvZ** nq †c‡U›U, bv nq Dw™‡`i bZb RvZ msi¶‡Yi GKwU wbw`ó e¨e¯v ev GB `B e¨e¯vi mw¤§wjZ †Kv‡bv c×wZi gva¨‡g mi¶v Kiv †h‡Z cv‡i, Z‡e GUv wbfi K‡i GK GKwU †`‡ki Ici (Av‡iv Z‡_¨i Rb¨ †`Lb *www.upov.int* I‡qemvBU)|

†c‡U‡›Ui gva¨‡g †Kvb AwaKvi¸‡jv gÄi Kiv nq?

GKwU †c‡U›U Gi gwjK‡K †mB D™vebwU ewYwR¨Kfv‡e e¨envi‡ii †¶‡Î Ab¨ Kv‡ivi **AwaKvi iwnZ** Kivi ¶gZv c`vb K‡i| Gi g‡a¨ i‡q‡Q, gwj‡Ki Ab‡gv`b Qvov †mB D™veb e¨envi K‡i GKwU cY¨ ˆZwi, e¨envi, wewµi c¯ve, weµq ev Avg`wb Kivi A‡b¨i AwaKvi wbwl× ev eÜ ivLvi AwaKvi|

GUv g‡b ivLv ¸i"ZcY †h, GKwU †c‡U›U Gi gwjK‡K Ôe¨envi‡ii ¯vaxbZvÕ c`vb K‡i bv ev †c‡U‡›Ui AvIZvf³ D™veb wbR¯v‡_ e¨envi‡ii AwaKvi c`vb K‡i bv, †Kej G AwaKvi †_‡K Ab¨ mevB‡K ev` iv‡L| GUv‡K Le m² cv_K¨ e‡j g‡b n‡Z cv‡i, Z‡e †c‡U›U e¨e¯v wel‡q Rvbv‡evSv Ges wKfv‡e GKwaK †c‡U‡›Ui g‡a¨ cvi¯úwiK †hvMv‡hvM N‡U Zv RvbvUv Le Ri"wi| Avm‡j, A‡b¨i gwjKvbvaxb †c‡U›U Avcbvi wb‡Ri †c‡U‡›Ui AskZ AwaµgY Ki‡Z cv‡i ev cwiciK n‡Z cv‡i| G Kvi‡Y Avcbvi wb‡Ri †c‡U›U ewYwR¨KxKi‡Yi mgq Ab¨vb¨ gwjK‡`i †c‡U›U e¨envi‡ii Rb¨ GKwU jvB‡mÝ †bqvi ev Ab¨‡K jvB‡mÝ †`qvi `iKvi n‡Z cv‡i|

GQvov, wKQ wbw`ó D™veb (†hgb Ila) ewYwR¨KxKi‡Yi c‡e Ab¨vb¨ Qvo c‡Îi c‡qvRb nq (mswkó wbqšK ms¯v †_‡K evRviRv‡Zi Ab‡gv`b)|

D™veK †K Ges GKwU †c‡U‡›Ui gwjKvbv Kvi _v‡K?

†h e¨w³ D™veb wel‡q c_g aviYv K‡ib wZwb n‡"Qb D™veK, Ab¨w`‡K †h e¨w³ (ev †Kv¤úvwb) †c‡U›U Av‡e`b Rgv †`b wZwb n‡"Qb †c‡U›U Av‡e`bKvix, aviK ev gwjK| wKQ wKQ †¶‡Î D™veKI Av‡e`b Ki‡Z cv‡ib, Z‡e G `ÔRb mvaviYZ Avjv`v Avjv`v ¯Zv; Av‡e`bKvix cvqk n‡q _v‡K †Kv‡bv †Kv¤úvwb ev M‡elYv cwZôvb, hviv D™veK‡K wb‡qvM c`vb K‡i| wb‡Pi wbw`ó cwiw¯wZ¸‡jv we‡kl‡Y Kiv Ri"wi :

- **Ggcwq Bb‡fbkbm:** AwaKvsk †`‡k, PvKwi‡Z KgiZ Ae¯vq DbqbKZ †Kv‡bv D™veb AvcbvAvcwb wb‡qvMKvixi `L‡j hvq| Avevi wKQ †`‡k, GUv ZLbB c‡hvR¨ n‡e hLb PvKwii k‡Z GUv D‡jŁ _v‡K| wKQ wKQ †¶‡Î, (†hLv‡b wb‡qvM welqK †Kv‡bv Pw³ _v‡K bv) D™veb e¨envi‡ii AwaKvi _v‡K D™ve‡Ki, wKš wb‡qvMKvix cwZôvb‡K Zv‡`i Af¨šixY D‡Ï‡k¨ †mB D™veb e¨envi‡ii AwaKvi c`vb Kiv nq, †h AwaKvi wVK GK‡PwUqv bq (Ôkc ivBUmÕ ejv nq)| fwel¨‡Z †Kv‡bv we‡iva gxgvsmvq Ggcwq Bb‡fbkb welqK gwjKvbvi welqwU †hb wb‡qvM Pw³‡Z Ašf³ _v‡K Zv wbwðZ Ki‡Z wbR †`‡ki mswkó AvB‡b wK weavb i‡q‡Q Zv †`LvUv Ri"wi|

www.wipo.int/sme/

- **BwÛ‡c‡Û›U KbUvKUim:** AwaKvsk †`‡k, GKwU bZb cY¨ ev cwµqv Dbq‡b †Kv¤úvwb GKRb ¯Zš e¨w³ (BwÛ‡c‡Û›U KbUvKUim) wb‡qvM †`q hvi gwjKvbvq _v‡K D™vebwU, hw` bv Ab¨fv‡e †mUv D‡jŁ _v‡K| Gi A_ n‡"Q, †Kv¤úvwb‡K hw` D™ve‡bi ¯Z c`vb K‡i †Kv‡bv wjwLZ Pw³ m¤úvw`Z bv nq, †m‡¶‡Î D™vweZ cY¨ ev cwµqvi Ici †Kv¤úvwbi †Kv‡bv gwjKvbv _vK‡e bv, GgbwK GRb¨ hw` †Kv¤úvwb †mB BwÛ‡c‡Û›U KbUvKUi‡K A_ cwi‡kva K‡i _v‡K|
- **†hŠ_ D™veK:** hw` GKwU D™veb wel‡q GKwaK e¨w³ h_vh_ Ae`vb iv‡Lb Zvn‡j Zv‡`i‡K †hŠ_ D™veK wn‡m‡e ghv`v w`‡Z n‡e Ges †c‡U›U Av‡e`bc‡Î Gfv‡e D‡jŁ Ki‡Z n‡e| hw` †hŠ_ D™veKiv wb‡RivB †c‡U›U Av‡e`b K‡ib †m‡¶‡Î Zv‡`i `ÔRb‡KB †hŠ_fv‡e †c‡U›U gÄi Kiv n‡e|
- **†hŠ_ gwjK:** G‡Ki AwaK gwjK ev ¯Zvi gwjKvbvaxb †Kv‡bv †c‡U‡›Ui mweav gZb e¨envi ev KvhKix Ki‡Z wewfb †`k ev cwZôv‡bi AvBbKvbb GK GK iKg| wKQ †¶‡Î, †hŠ_ D™veK‡`i GKRb GKwU †c‡U›U jvB‡mÝ Ab‡gv`b Ki‡Z cv‡ib bv ev †hŠ_ gwjK‡`i AbgwZ Qvov ZZxq c‡¶i gva¨‡g AwaKvi jw•NZ n‡j GKv GKv gvgjvl Ki‡Z cv‡ib bv|

mvgwi †PKwj ÷

- **Avcbvi D™vebwU wK †c‡U›U Kiv DwPZ?** †c‡U›U mi¶vi mweav¸‡jv we‡ePbv Ki"b, weKí c×wZ¸‡jv cix¶v Ki"b (†MvcbxqZv, BDwUwjwU g‡Wj BZ¨vw`) Ges Avq/e¨‡qi wfwË‡Z we‡kl‡Y Ki"b| Avcwb †hb m‡PZb wm×vš wb‡Z cv‡ib Zv wbwðZ Ki‡Z †c‡U›U m¤ú‡K cieZx Aa¨vq¸‡jv cob|
- **Avcbvi D™vebwU wK †c‡U›U‡hvM¨?** †c‡U›U‡hvM¨Zvi eva¨evaKZv ¸‡jv we‡ePbv Ki"b, Avcbvi †`‡k †Kvb¸‡jv †c‡U›U‡hvM¨ Zv AbmÜvb Ki"b Ges GKwU cvqi AvU AbmÜvb cwiPvjbv Ki"b (c‡ii Aa¨vq †`Lb)|
- hviv D™veb Dbq‡b nq Aw_Kfv‡e, bv nq KwiMixfv‡e Ask wb‡q‡Q GBi¡c †Kv¤úvwb, Gi Kgx Ges Ab¨vb¨ e¨emwqK Askx`vi‡`i g‡a¨ **D™ve‡bi Ici AwaKvi mswké welq¸‡jv ¯úó wK bv wbwðZ †nvb|**

2. wKfv‡e GKwU †c‡U›U jvf Kiv hvq?

†Kv_v †_‡K ïi“ Kiv DwPZ?

mvaviYZ cv_wgK avcwU n‡”Q **cvqi AvU AbmÜvb** cwiPvjbv Kiv| weke¨vcx 4 †KwUi I †ewk gÄiKZ †c‡U›U Ges †KwU †KwU gw`Z cKvkbv i‡q‡Q †h¸‡jv Avcbvi †c‡U›U Av‡e`‡bi weci x‡Z m¤ve¨ cvqi AvU| G Kvi‡Y SwK †_‡K hvq †h, I¸‡jvi wKQ †idv‡iÝ ev †idv‡i‡Ýi msweg kY Avcbvi D™veb‡K Awfbe bq e‡j cgvY Ki‡Z cv‡i Ges G Kvi‡Y Avcbvi D™vebwU mvavibZ ‡c‡U›U-A‡hvM¨I n‡Z cv‡i|

GKwU cvqi AvU AbmÜvb Avcbv‡K GKwU †c‡U›U Av‡e`‡bi Ici Ah_v e¨‡qi nvZ †_‡K i¶v Ki‡Z cv‡i, hw` †mB AbmÜvb Ggb †Kv‡bv cvqi AvU †idv‡iÝ Z‡j Av‡b †hUv Avcbvi D™ve‡b Ašf³ i‡q‡Q| GKwU cvqi AvU AbmÜv‡bi AvIZv mswké me A‡c‡U›UKZ mwnZ¨ chš we¯Z nIqv c‡qvRb, Gi g‡a¨ i‡q‡Q KwiMix I ˆeÁvwbK Rvbvj, cvV¨eB, m‡¤§jb weeiYx, w_wmm, I‡qemvBU, †Kv¤úvwb ewkqi, ewYR¨ mswké cKvkbv Ges msev`c‡Îi wbeÜ| †c‡U›U Z_¨ n‡”Q **Kwmdv‡qW (†kYxe×) KwiMix Z‡_¨i GKwU ¯Zš Drm,** †hUv †Kv¤úvwbi †KŠkjMZ e¨emv cwiKíbvi Rb¨ LeB gj¨evb e‡j we‡ewPZ n‡Z cv‡i| AwaKvsk ¸i“ZcY D™veb memvavi‡Yi Rb¨ c_g ev‡ii gZ D‡bwPZ nq hLb †c‡U›U ev †c‡U›U Av‡e`bcÎ cKwkZ nq| Gfv‡e bZb cY¨wU evRv‡i Avmvi A‡bK Av‡MB †c‡U›U Ges †c‡U›U Av‡e`bcÎ Pjgvb M‡elYv ev D™veb wel‡q Rvbv‡kvbvi m‡hvM c`vb K‡i _v‡K| †h †Kv‡bv †Kv¤úvwbi M‡elYv I Dbqb D‡`¨v‡Mi c‡qvRbxq Bbc‡Ui Ask nIqv DwPZ †c‡U›U AbmÜvb|

†c‡U›U WvUv‡eR AbmÜv‡bi ¸i“Z

GKwU D™veb †c‡U›U‡hvM¨ wK bv Zv cix¶v Kivi cvkvcwk †c‡U›U WvUv‡e‡Ri mgqgZ I KvhKi AbmÜvb wKQ wKQ wel‡q AZ¨š c‡qvRbxq wKQ Z_¨ c`vb Ki‡Z cv‡i| G¸‡jv n‡”Q :

- eZgvb I fwel¨r cwZ‡hvMx‡`i M‡elYv I Dbqb (R&D) KgKvÛ;
- GKwU wbw`ó KwiMix Lv‡Zi Pjgvb ceYZv;
- jvB‡mwÝs‡qi Rb¨ chw³;
- m¤vebvgq mieivnKvix, e¨emvwqK Askx`vi ev M‡elK‡`i Drm;
- †`‡k Ges we‡`‡k m¤ve¨ Dch³ evRvi;
- Ab¨ cwZôv‡bi mswké †c‡U›U, †hUv wbwðZ Ki‡e †h Avcbvi cY¨ Zv‡`i AwaKvi f½ Ki‡e bv (ÔwdWg U Acv‡iUÕ);
- mswké †c‡U›U, hvi †gqv` †kl n‡q †M‡Q Ges Hme chw³, hv memvavi‡Yi e¨envi‡ii Rb¨ Db¥³ n‡q †M‡Q; Ges
- we`¨gvb chw³i Ici wfwË K‡i m¤ve¨ bZb Dbqb|

www.wipo.int/sme/

†Kv_vq Ges Kxfv‡e cvqi AvU AbmÜvb Kiv hvq?

AwaKvsk †c‡U›U Awd‡mi gva¨‡g cKwkZ †c‡U›U Ges †c‡U›U Av‡e`b AbjvB‡bi gva¨‡g cvIqv hvq, †hUv cvqi AvU AbmÜvb cwµqv‡K mnRZi K‡i‡Q| †hme IP Awdm webv cqmvq e¨env‡ii D‡Ï‡k¨ Zv‡`i **†c‡U›U WvUv‡eR AbjvB‡b †i‡L‡Q** †m¸‡jvi ZwjKv cvIqv hv‡e *www.wipo.int/ipd/en/resources/links.jsp* I‡qemvB‡U| GQvov, wdÛi wewbg‡q AwaKvsk †`‡ki RvZxq †c‡U›U Awdm †c‡U›U AbmÜvb †mev c`vb K‡i| †c‡U›U msweó Z_¨ cvIqvi cwµqvwU GZUv mnR n‡q‡Q †Kej B›Uvi‡b‡Ui Kj¨v‡Y, GUv Qvov D"P gvbm¤úb †c‡U›U AbmÜv‡bi KvRwU mnR nZ bv| †c‡U›U cwifvlv cvqk RwUj I A‡eva¨ Ges †ckvMZ AbmÜv‡bi †¶‡Î Dch³ ÁvbI we‡klÁ Áv‡bi c‡qvRb nq| hw` I AbjvBb †c‡U›U †WUv‡eR webv cqmvq cv_wgK fv‡e AbmÜvb Kiv hvq, ZeI AwaKvsk †Kv¤úvwbi ¸i"ZcY e¨emvwqK wm×vš Mn‡Y †c‡U›U Z_¨ c‡qvRb nq (A_vr †c‡U›U Av‡e`b Kiv n‡e wK n‡e bv), G Kvi‡Y Zviv GKRb †c‡U›U †ckvRxexi †mevi Ici wbfi K‡i Ges/ev Av‡iv AZ¨vawbK ewYwR¨K WvUv‡eR e¨envi K‡i| GKwU wK-IqvW (gj kã), †c‡U›U †kYx f³KiY (Kwmwd‡Kkb) ev Ab¨vb¨ AbmÜvb gvcKwVi wfwË‡Z cvqi AvU AbmÜvb Pvjv‡bv †h‡Z cv‡i| †h ai‡bi AbmÜvb †KŠkj, †kYxf³KiY c×wZ GLv‡b c‡qvM Kiv nq Ges †h e¨w³ GUv AbmÜvb K‡ib Zvi KwiMix `¶Zv Ges †h †c‡U›U WvUv‡eR e¨envi Kiv n‡"Q Zvi wfwË‡Z cvqi AvU D‡b¥wPZ nq|

AvšRwZK †c‡U›U †kYxf³KiY

AvšRwZK †c‡U›U †kYxf³KiY (B›Uvib¨vkbvj †c‡U›U Kwmwd‡KkbÑIPC) n‡"Q GKwU µgwaKvi ZwšK †kYxf³KiY c×wZ| †c‡U›U Z_¨w` †kYxe× Ki‡Z I AbmÜv‡b GUv e¨eüZ nq| †c‡U›U `wjjw` µgvbmv‡i web¨vm Kivi Kv‡R GUv GKwU DcKiY wn‡m‡e KvR K‡i| ZvQvov, Z_¨ weZi‡Yi wbewPZ wfwË Ges msweó chw³ †¶‡Î AZ¨vawbK Z_¨ AbmÜv‡bi wfwË wn‡m‡e I KvR K‡i GUv| IPCÛi mßg ms¯‹iY MwVZ **8 wU Aa¨v‡q,** †hUv **120 wU †kYx, 628 wU Dc‡kYx Ges 69,000 `‡j** wef³| 8 wU Aa¨vq n‡"Q :

K. gvbe Avek¨KZv;
L. ‰kwíK KgKvÛ; cwienb;
M. imvqb, avZwe`¨v;
N. e¯wkí; KvMR;
O. ¯vqx wbgvY;
P. hš‡KŠkj; Av‡jvK c¾jb (jvBwUs);
Zvc Drcv`b (wnwUs); A¯; we‡ùviK;
Q. c`v_we`¨v;
R. we`¨r (B‡jw±wmwU) eZgv‡b, 100wU †`k Zv‡`i †c‡U›U †kYxe×Ki‡Y IPC e¨envi Ki‡Q| I‡qe wVKvbv n‡"Q *www.wipo.int/classifications/en/ipc/index.html.*

†c‡U›U mi¶vi Av‡e`b wKfv‡e Kiv hvq?

cvqi AvU AbmÜvb Ges †c‡U›U mi¶vi wm×vš †bqvi ci, GKwU †c‡U›U Av‡e`b cÎ c¯Z K‡i RvZxq ev AvÂwjK †c‡U›U Awd‡m Rgv w`‡Z n‡e| Av‡e`b c‡Î Ašf³ _vK‡e D™veb m¤ú‡K cYv½ Z_¨, †c‡U›U `we (†KBg) †hUv Av‡e`bKZ †c‡U‡›Ui AvIZv wb‡`k Ki‡e, Wwqs Ges GKwU msw¶ß mvi (A¨ve÷v±)| (GKwU †c‡U›U Av‡e`‡bi KvVv‡gv welqK Av‡iv Z‡_¨i Rb¨ †`Lb cô v 24)| †Kv‡bv †Kv‡bv †c‡U›U Awdm B›Uvi‡b‡Ui gva¨‡g Av‡e`bcÎ `wL‡ji m‡hvM c`vb K‡i _v‡K| Avevi †Kvb †Kvb †`‡k, GKwU mvgwqK †c‡U›U Av‡e`bcÎ ci‡Yi Ackb _vK‡Z cv‡i (23 cô vi e· AvB‡Ug †`Lb)|

†c‡U›U Av‡e`bcÎ c¯‡Zi KvRwU mvaviYZ GKRb †c‡U›U A¨vUwb ev G‡R›U K‡i _v‡Kb, whwb Av‡e`b cwµqvq Avcbvi ¯v‡_i cwZwbwaZ K‡ib| c‡ii cô vi e· AvB‡U‡g Av‡e`b cwµqvi GKwU †gŠwjK aviYv c`vb Kiv n‡q‡Q| GUv g‡b ivLv ¸i“ZcY †h, GUv GK GK †`‡k GK GK iKg n‡Z cv‡i| G Kvi‡Y Av‡e`b cwµqv I c‡qvRbxq wd m¤ú‡K nvjbvMv` Z‡_¨i Rb¨ mswkó †`‡ki RvZxq †c‡U›U Awdm ev GKwU †c‡U›U †mev cwZôv‡bi mnvqZv †bqv c‡qvRb|

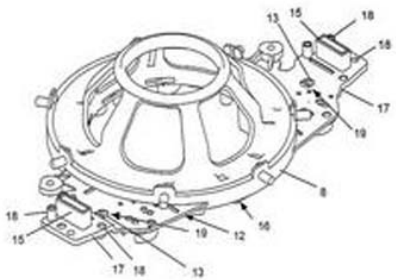

AvšRwZK Av‡e`b bs wcwUwm/AwW B 2003/003510| †gvUi Mwoi w÷qwis ûBj-G h³ i‡q‡Q mgwšZ Gqvie¨vM gwWDj|

Av‡e`bcÎ cwµqvRvZÑ av‡c av‡c

†c‡U›U Rb¨ †c‡U›U Awdm †h avc¸‡jv MnY K‡i †_‡K Zv †`k‡f‡` wfbZi n‡Z cv‡i, Z‡e cavbZ wb‡gi c×wZ AbmiY K‡i:

- **AvbôwbK cix¶v :** †c‡U›U Awdm Av‡e`b cÎwU cix¶v K‡i GUv wbwðZ Ki‡e †h, ckvmwbK eva¨evaKZv ev AvbôwbKZvi m‡½ GB Av‡e`bcÎwU m½wZcY (A_vr, msweké me KvMRcÎ Ašf³ i‡q‡Q Ges Av‡e`b wd cwi‡kva Kiv n‡q‡Q)|
- **AbmÜvb :** A‡bK †`‡kB, be ceZb msweké Lv‡Z cvqi AvU wbavi‡Yi Rb¨ †c‡U›U Awdm GKwU AbmÜvb KvR cwiPvjbv K‡i| GB AbmÜvb wi‡cvUwU ¯Zš (mvemU¨vbwmf) cix¶vi mgq cvqi Av‡Ui m‡½ `vexKZ D™ve‡bi Zjbv K‡i|
- **¯Zš cix¶v :** ¯Zš cix¶vi D‡Ïk¨ n‡"Q Av‡e`b cÎwU †h †c‡U›U‡hvM¨Zvi eva¨evaKZv ciY K‡i‡Q Zv wbwðZ Kiv| mKj †c‡U›U AwdmB †c‡U›U‡hvM¨Zvi me Avek¨KZvi wecix‡Z Av‡e`bcÎ cix¶v K‡i bv, Ges †Kv‡bv †Kv‡bv Awdm GKwU mwbw`ó mg‡qi g‡a¨ Abi"× n‡q KvR K‡i _v‡K| GB cix¶vi djvdj wjwLZ AvKv‡i Av‡e`bKvixi (A_ev Zvi A¨vUwb) Kv‡Q cvVv‡bv nq †hb †m Gi DËi w`‡Z cv‡i ev cix¶vi mg‡q DÌwcZ †Kv‡bv Awf‡hvM Av‡e`bcÎ †_‡K ev` w`‡Z cv‡i| G cwµqvi djvdj cvqk †c‡U‡›Ui `vexi AvIZv‡K msKwPZ K‡i|
- **cKvkbv :** AwaKvsk †`‡k, †c‡U›U Av‡e`bcÎ Rgv †`qvi 18 gvm ci †c‡U›U Av‡e`bcÎwU cKwkZ nq| mvaviYZ, †c‡U›U gÄ‡ii ci †c‡U›U Awdm GUv cKvk K‡i|
- **Ab‡gv`b :** cix¶vi ci hw` BwZevPK wm×vš MnxZ nq, Zvn‡j †c‡U›U Awdm †c‡U›U gÄi/Ab‡gv`b K‡i Ges Ab‡gv`‡bi GKwU mb` Bm¨ K‡i|
- **we‡iwaZv :** AwaKvsk †c‡U›U Awdm GKwU wbw`ó mgq c`vb K‡i _v‡K, †h mg‡qi g‡a¨ ZZxq †Kv‡bv c¶ †c‡U›U gÄ‡ii we‡iwaZv Ki‡Z cv‡i| D`vniY wn‡m‡e, ZZxq †Kv‡bv c¶ GB wfwË‡Z we‡iwaZv Ki‡Z cv‡i †h `weKZ †c‡U›UwU †Kv‡bv be ceZb bq| we‡iwaZv Kiv hvq †c‡U›U gÄ‡ii c‡e ev c‡i Ges GKwU wbawiZ mg‡qi g‡a¨B †Kej GB we‡iwaZv Kiv m¤e|

†c‡U›U Av‡e`bcÎ `wLj
↓
AvbôwbK cix¶v
↓
Av‡e`bcÎ cKvk
↓
AbmÜvb Ges ¯Zš cix¶v
↓
Ab‡gv`b I cKvkbv
↓
we‡iwaZv

Dc‡ii c×wZwU n‡"Q wKQ †c‡U›U Awd‡mi †c‡U›U Ab‡gv`b cwµqvi QK| GUv Rvbv Ri"wi †h, Gc×wZ GK GK Awd‡mi †¶‡Î GK GK iKg|

D™veb †c‡U‡›Ui †¶‡Î LiP wK iKg?

†c‡U›U LiP GK †`k †_‡K Av‡iK †`‡k D‡jŁ‡hvM¨ nv‡i evo‡Z/Kg‡Z cv‡i| G‡¶‡Î A‡bK¸‡jv welq wbfi K‡i, †hgb D™ve‡b cKwZ, Gi RwUjZv, A¨vUwb wd, Av‡e`‡bi ^`N¨ Ges †c‡U›U Awd‡mi cix¶v PjvKv‡j DÌwcZ †Kv‡bv Awf‡hvM| GUv ¯§iY ivLv AZ¨š¸i"ZcY Ges †c‡U›U Av‡e`b I i¶Yv‡e¶Y mswkó LiP wel‡q h_vh_ ev‡RU Kiv I Ri"wi|

- **cvqi AvU AbmÜv‡bi** Kv‡R mvaviYZ LiP RwoZ, we‡kl K‡i Avcwb hw` GKRb we‡kl‡Ái †mevi Ici wbfi K‡ib;
- Av‡e`bcÎ `wL‡ji Rb¨ **Avbôwb K wd** cwi‡kva Ki‡Z nq †hUv GK GK †`‡ki †¶‡Î GK GK iKg| wd KvVv‡gv m¤‡Ü cYv½ Z_¨ w`‡Z cvi‡e mswkó RvZxq ev AvÂwjK †c‡U›U Awdm| SME (¶` I gvSvwi wkí cwZôvb) Ges AbjvB‡b Av‡e`‡bi †¶‡Î wKQ †`‡k Qv‡oi e¨e¯v i‡q‡Q| GQvov, AwZwi³ wd cwi‡kv‡ai wfwË‡Z wKQ †`k ZiwšZ AbmÜv‡bi mweav c`vb K‡i|
- Av‡e`b cwµqvq mnvqZvi Rb¨ (†c‡U›U‡hvM¨Zv wel‡q gZvgZ c`vb, †c‡U›U Av‡e`bc‡Îi Lmov ^Zwi, AvbôwbK Wwqs c¯Z Ges †c‡U›U Awd‡mi m‡½ †hvMv‡hvM) Avcwb hw` GKRb **†c‡U›U A¨vUwb/G‡R‡›Ui** †mevi Ici wbfi K‡ib Zvn‡j AwZwi³ LiP enb Ki‡Z n‡e|
- †c‡U›U Awd‡mi gva¨‡g †c‡U›U gÄ‡ii ci Avcbv‡K Aek¨B **i¶Yv‡e¶Y ev bevqb** wd c`vb Ki‡Z n‡e, †c‡U‡›Ui ^eaZv i¶vi Rb¨ mvaviYZ eQi wfwË‡Z GUv cwi‡kva Ki‡Z nq;
- Avcwb hw` we‡`‡k Avcbvi D™veb †c‡U›U Kivi wm×vš wb‡q _v‡Kb, Zvn‡j mswkó †`‡k **†c‡U›U `wL‡ji wd** cwi‡kv‡ai K_v we‡ePbv Ki‡Z n‡e| GQvov i‡q‡Q **Abev` LiP** Ges ¯vbxq **†c‡U›U G‡R‡›Ui †mev LiP** (†hUv AwaKvsk †`‡k we‡`wk Av‡e`bc‡Îi Rb¨ eva¨ZvgjK);
- **gvB‡µvAMwbRg** mswkó D™vebvi †¶‡Î, †h‡¶‡Î gvB‡µvAMwbRg ev ^RweK DcKiYwU GKwU ¯xKZ wW‡cwRUwi ms¯vq Rgv †`qv AZ¨vek¨K, Av‡e`b wd, RgvKZ DcKiYwU msi¶Y Ges Gi m¶gZv cix¶vi LiP cwi‡kva Ki‡Z n‡e|

OAPI †c‡U›U bs 40893| Bgv‡RwÝ A‡UvUvÝwdDkb †mUwU (BGwU-‡mU) D™veb I †c‡U›U K‡ib bvB‡Rwiq Wv³vi Iwf‡q‡gvI fv‡`| †hme †ivMx Af¨šixY i³¶i‡Y †fv‡Mb Zv‡`i kix‡ii MnÝi †_‡K i³¶iY wbivg‡q GB hšwU mnvqZv K‡i| GB cY¨wU ewYwR¨KxKiY K‡i‡Q BGwU-‡mU BÛw÷R, dv÷ †gwW‡Kj Ges †÷ivBj cWv±m|

GKwU †c‡U›U Av‡e`bcÎ KLb Rgv †`qv DwPZ?

†c‡U›U Av‡e`b `wL‡ji Rb¨ c‡qvRbxq me Z_¨ _vK‡jB †Kej †c‡U›U mi¶vi Rb¨ Av‡e`b `wLj Kiv fv‡jv| Z‡e, GLv‡b †ek wKQ welq i‡q‡Q †hUv Av‡e`bKvix‡K GKwU †c‡U›U Av‡e`bcÎ Rgv †`qvi DrKó mgqwU wbavi‡Y mnvqZv Ki‡Z cv‡i| Av‡e`bcÎ `“Z Rgvi KviY¸‡jvi g‡a¨ i‡q‡Q :

- we‡ki AwaKvsk †`‡k (h³ivó e¨ZxZ, 22 côvq e· AvB‡UgwU †`Lb) †c‡U›U gÄi Kiv nq dv÷-U-dvBj wfwË‡Z A_vr Av‡M Rgv w`‡j Av‡M gÄi| G Kvi‡Y †Kv‡bv D™veb wel‡q AvcwbB †h c_g Av‡e`b K‡i‡Qb †mUv wbwðZ Ki‡Z Av‡e`bcÎ Av‡M Rgv †`qvi welqwU †ek ¸i“ZcY, †hb A‡b¨i Kv‡Q Avcbvi D™vebwU ciwRZ bv nq|
- Avcwb hw` Aw_K mnvqZv cZ¨vkv K‡ib ev Avcbvi D™veb ewYwR¨KxKi‡Yi Rb¨ jvB‡mÝ c`v‡bi wm×vš wb‡q _v‡Kb Zvn‡j †c‡U›U mi¶vi Rb¨ `“Z Av‡e`b KivUv mnvqK n‡e|
- mswkó †c‡U›U Awdm Ab‡gv`b w`‡jB †Kej Avcwb GKwU †c‡U›U KvhKi Ki‡Z cv‡ib, †hUv Ggb GK cwµqv †hLv‡b K‡qK eQi I mgq jvM‡Z cv‡i (26 côv †`Lb)|

G m‡Ë I, D™veb nv‡Z †c‡qB †c‡U›U Av‡e`‡bi Rb¨ ûgwo †L‡q covi wKQ Amweavl _vK‡Z cv‡i| Gi KviY¸‡jv n‡”Q :

- Avcwb hw` †ek Av‡MB Av‡e`b K‡i _v‡Kb Ges cieZx mg‡q D™ve‡b D‡jŁ‡hvM¨ cwieZb Av‡bb †m‡¶‡Î D™veb wel‡q c‡ei weeiY cwieZb Kiv mvaviYZ m¤eci nq bv|
- GKwU †`k ev AÂ‡j †c‡U›U Av‡e`bcÎ `wL‡ji ci GKB D™veb wel‡q Avcbvi e¨emvwqK ¯v_ mswkó Ab¨vb¨ me †`‡k Av‡e`bcÎ `wL‡ji †¶‡Î c_g Av‡e`b `wL‡ji ci Avcbvi nv‡Z mgq _v‡K 12 gvm (AMwaKvigjK ZwiL wel‡q Z‡_¨i Rb¨ †`Lb côv 30)| GUv mgm¨v wn‡m‡e †`Lv w`‡Z cv‡i hw` wewfb †`‡ki Av‡e`b wd I i¶Yv‡e¶Y LiP Avcbvi †Kv¤úvwbi Rb¨ A‡bK †ewk n‡q _v‡K| GB mgm¨v mgvav‡bi GKwU Dcvq n‡”Q †c‡U›U †KvAcv‡ikb wUwU (PCT) e¨envi‡ii gva¨‡g 30 gvm mg‡qi Rb¨ Abev` wd I Av‡e`b wd ¯wMZ ivLv|

†c‡U›U Av‡e`b `wL‡ji Dch³ mgq wel‡q wm×vš Mn‡Yi †¶‡Î GUv g‡b ivLv AZ¨š ¸i“ZcY †h, D™vebwU cKv‡ki Av‡MB †hb Av‡e`b Kiv nq| Av‡e`bcÎ `wL‡ji c‡e GUv cKvk Kiv †h‡Z cv‡i (A_vr cix¶vgjK evRviRv‡Zi Rb¨, wewb‡qvMKvix ev Ab¨vb¨ e¨emvwqK Askx`vi‡`i Kv‡Q), Z‡e GKwU †MvcbxqZv ev A-cKvk‡hvM¨ Pw³ ¯v¶‡ii wfwË‡ZB †mUv Kiv DwPZ|

†c‡U›U Av‡e`b `wL‡ji c‡e GKwU D™veb †Mvcb ivLv KZUv Ri“wi?

Avcwb hw` Avcbvi D™ve‡bi Ici GKwU †c‡U›U †c‡Z AvMnx †nvb, Zvn‡j Av‡e`b `wL‡ji c‡e Zv †Mvcb ivLv AZ¨š c‡qvRbxq| A‡bK cwiw¯wZ‡ZB, Av‡e`b `wL‡ji c‡e D™vebwU memvavi‡Yi D‡Ï‡k¨ cKvk Gi Awfbe Z ˆewkó¨‡K webó Ki‡e, GUv‡K A‡c‡U›U‡hvM¨ K‡i Zj‡e, hw` bv c‡hvR¨ AvB‡b Ô‡Mm wcwiqwÕ bv _v‡K (23 côv †`Lb)|

G Kvi‡Y, D™veK, M‡elK I †Kv¤úvwb¸‡jvi Rb¨ D™veb wel‡q †Kv‡bv Z_¨ cKvk Gwo‡q hvIqvq DwPZ, †h Z_¨¸‡jv †c‡U›U Av‡e`b `wL‡ji AvM chš Gi †c‡U›U‡hvM¨ Zv‡K Avµvš Ki‡Z cv‡i|

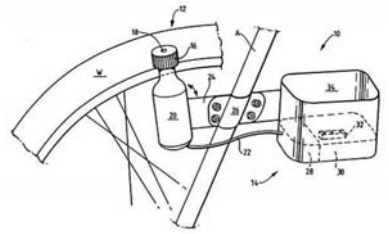

AvšRwZK Av‡e`b bs wc wm wU/AvB we01/00706| †gvevBj †dvb PwRs‡q AMMwZ|

dv÷-U-dvBj ebvg dv÷-U-Bb‡f›U

AwaKvsk †`‡k, †c‡U›U Ab‡gv`b Kiv nq H **c_g e¨w³‡K whwb †Kv‡bv D™ve‡bi Rb¨ †c‡U›U Av‡e`bcÎ `wLj K‡ib|** G‡¶‡Î D‡jŁ‡hvM¨ e¨wZµg n‡"Q h³ iv‡ó, †hLv‡b **dv÷-U-Bb‡f›U** c×wZ KvhKi| Gi A_ n‡"Q, GKB D™veb wel‡q †c‡U›U Av‡e`b `wL‡ji †¶‡Î, †c‡U›UwU H c_g D™veK‡K gÄi Kiv n‡e whwb D™veb msµvš c_g aviYwU cKvk K‡ib Ges D™vebwU ev¯e i¦c †`b, Zv wZwb c_g Av‡e`bcÎ `wLj K‡ib Avi bvB K‡ib| dv÷-U-Bb‡f›U c×wZ‡Z D™veK cgv‡Yi †¶‡Î, hZmnKv‡i iw¶Z, mgqgZ ¯v¶wiZ Ges ZwiL h³ **M‡elYvMvi †bvUeK** (j¨ve‡iUwi †bvUeK) msi¶Y KivUv AZ¨š Ri“wi, †h¸‡jv Av‡iKwU †Kv¤úvwb ev D™ve‡Ki m‡½ we‡iva wb®úwË‡Z cgvY wn‡m‡e e¨envi Kiv †h‡Z cv‡i|

†Mm wcwiqW Kx?

‡Kvb †Kvb †`‡ki RvZxq AvB‡b 6 †_‡K 12 gv‡mi GKwU Ô‡Mm wcwiqWÕ ev AbMn gjK mgq c`v‡bi mweav i‡q‡Q| D™veK KZK D™veb welqK Z_¨ cKv‡ki mgq †_‡K ev Av‡e`bKvix KZK Av‡e`bcÎ `wL‡ji ci †_‡K G mgq Ab‡gv`b Kiv nq, †hLv‡b G RvZxq Z_¨ D‡bwP‡bi d‡j †Kv‡bv D™veb Gi †c‡U›U- ‡hvM¨Zv nvivq bv| GB †`k¸‡jv‡Z, GKwU †Kv¤úvwb Zvi D™veb cKvk Ki‡Z cv‡i, †hgb ewYR¨ †gjvq c`k‡bi gva¨‡g ev †Kv¤úvwb K¨vUvjM ev KwiMix Rvbv‡j cKvk K‡i, Ges †Mm wcwiq‡Wi g‡a¨ †c‡U›U Av‡e`b `wLj Ki‡Z cv‡i, †hLv‡b D™vebwU Gi †c‡U›U- ‡hvM¨Zv nvivq‡e bv ev GKwU †c‡U›U ARb †_‡K evav cvß n‡e bv|

Z‡e, GUv me †`‡ki †¶‡Î c‡hvR¨ bq, Avcbvi wb‡Ri †`‡k †Mm wcwiq‡Wi Ici wbfikxjZv Ab¨vb¨ evRv‡i G D™ve‡bi †c‡U›U gÄi cwµqv‡K evavM¯ Ki‡e, †hLv‡b †Mm wcwiqW †bB|

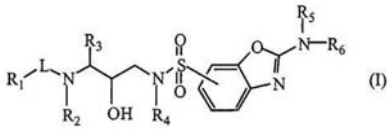

AvšRwZK †c‡U›U Av‡e`b bs wc wm wU/B wc 02/05212 eW‡¯úKUvg 2-A¨vg‡bv-‡eb‡Rv•v‡Rvj mvj‡dvbvgvBW GBP AvB wf †cwUR Bb‡nweUim|

mvgwqK †c‡U›U Av‡e`b

¸wU K‡qK †`‡k, (A‡÷wjqv, KvbvWv, fviZ Ges h³ivó) Av‡e`bKvix‡`i Rb¨ GKwU mvgwqK †c‡U›U Av‡e`bcÎ `wL‡ji m‡hvM i‡q‡Q| †c‡U›U e¨e¯vq Zjbvgjk ¯í Li‡P †XvKvi Rb¨ GB mvgwqK †c‡U›U Av‡e`b cYxZ n‡q‡Q| Av‡e`bKvix‡K Gici GKwU cYv½ †c‡U›U Av‡e`b `wL‡ji c‡e eQi Lv‡bK A‡c¶v Ki‡Z n‡Z cv‡i| wKfv‡e mvgwqK †c‡U›U Av‡e`b KvR K‡i †mUv GK GK †`‡ki †¶‡Î GK GK iKg| GB m‡hvM c`vbKvix †`k¸‡jv mvaviYZ Awfb wKQ ˆewkó¨ AbmiY K‡i, †h¸‡jv n‡"Q :

- mvgwqK †c‡U›U Av‡e`bcÎ mvaviYZ ¯Zš cix¶vi ce cvi K‡i bv;
- cYv½ †c‡U›U Av‡e`‡bi Zjbvq Gi Av‡e`b wd A‡bK Kg;
- mvgwqK Av‡e`bc‡Î `we (†KBg) Ašf³ _vKvi `iKvi nq bv| Z‡e, GLv‡b D™veb wel‡q we¯wiZ weeiY c`v‡bi c‡qvRb nq|

†c‡U›U Av‡e`‡bi KvVv‡gv Kx?

GKwU †**c‡U›U Av‡e`bc‡Îi** KvR¸‡jv n‡"Q :

- GUv †c‡U‡›Ui AvBbMZ AvIZv wbaviY K‡i;
- GUv D™ve‡bi cKwZ eYbv K‡i, Gi g‡a¨ Av‡Q D™vebwU wKfv‡e Kv‡R jvMv‡Z n‡e †m welqK wb‡`kbv;
- GUv D™veK, †c‡U›U gwjK Ges Ab¨vb¨ AvBbMZ welq m¤ú‡K we¯wiZ Z_¨ c`vb K‡i|

†c‡U›U Av‡e`bc‡Îi KvVv‡gv weke¨vcx GKBiKg Ges Gi g‡a¨ i‡q‡Q GKwU **Ab‡iva,** GKwU **weeiY, `we, Wwqs** (hw` c‡qvRb nq) Ges GKwU mvi-ms‡¶c| GKwU †c‡U›U WK‡g›U n‡Z cv‡i K‡qK cvZv †_‡K kZ kZ cvZv chš, GUv wbfi K‡i wbw`ó D™ve‡bi cKwZ I H KwiMix †¶‡Îi Ici|

Ab‡iva

GLv‡b D™ve‡bi bvg, Av‡e`bcÎ `wL‡ji ZwiL, AMwaKvigjK ZwiL Ges wbNÈgjK Z_¨, †hgb Av‡e`bKvix Ges D™ve‡Ki bvg I wVKvbv _v‡K|

eYbv

D™veb wel‡q wjwLZ eYbvq Aek¨B cYv½fv‡e D™veb m¤ú‡K Z_¨ _vK‡Z n‡e, †hb GKB KwiMix †¶‡Îi †Kv‡bv `¶ e¨w³ AwZwi³ Kkjx D‡`¨vM QvovB H eYbv I Wwqs †_‡K D™vebwU cbtwbgvY I c‡qvM Ki‡Z cv‡ib| GUv bv _vK‡j, †c‡U›U Ab‡gv`b bvI Kiv n‡Z cv‡i ev Av`vj‡Z P¨v‡j‡Äi ci ewZj n‡Z cv‡i|

`we

GKwU †c‡U›U mi¶vi AvIZv wbaviY K‡i `we ev †KBg| †c‡U›UKZ D™ve‡bi †¶‡Î GB `we AZ¨š Ri"wi †h‡nZ, hw` Gi Lmov wbggv‡bi n‡q _v‡K Zvn‡j mwZ¨Kv‡ii gj¨evb GKwU D™veb GKwU gj¨nxb †c‡U‡›U i¦cvšwiZ nIqvi m¤vebv †_‡K hvq, †hUv ev¯evq‡b evav †`qv mnR ev Gi †_‡K Ab¨ wWRvBb ˆZwi Kiv m¤e| †c‡U›U we‡iva wb®úwË‡Z, †c‡U›UwU ˆea wK bv Ges †c‡U›U AwaKvi jw•NZ n‡q‡Q wK bv Zv wbavi‡Yi c_g avc n‡"Q `wei ¯c‡¶ e¨vL¨v| †c‡U›U Av‡e`b c‡Îi Lmov ˆZwi‡Z, we‡kl K‡i `we wbavi‡Y GKRb we‡kl‡Ái civgk Mn‡Yi mcwik Kiv n‡"Q|

`wei D`vniY:

ÔAvBwik †iKMwbkb wm‡÷gÔ wk‡ivbv‡gi GB †c‡U›UwUi (†c‡U›U bs BDGm4641349) c_g `we wQj :

1. GKRb e¨w³‡K kbv³ Kivi c×wZ, hv MwVZ: H e¨w³i †Pv‡Li AvBwik I wcDwc‡ji b¨bZg GKwU As‡ki B‡gR ev Qwe msi¶Y K‡i; GKwU AvBwik I wcDwcjmn GKRb AÁvZ e¨w³i †PvL D™vwmZ K‡i H AÁvZ e¨w³i †Pv‡Li AvBwik I wcDwc‡ji GKB As‡ki Qwe †Zvjv; Ges AÁvZ e¨w³‡K kbv³ Ki‡Z AvBwi‡ki H As‡ki msiw¶Z Qwei m‡½ cieZx‡Z †Zvjv Qwe wgwj‡q †`Lv|

2. `we 1-Gi c×wZ, †hLv‡b †PvL D™vwmZ Kivi e¨vcviwU N‡U‡Q †Pv‡Li wcDwc‡ji GKwU cewbawiZ Ask cieZx‡Z †Zvjv Qwei b¨bZg AvBwik As‡ki m‡½ GKB cewbawiZ AvKv‡ii wcDwc‡ji msiw¶Z B‡g‡Ri m‡½ Zjbv Kivi gva¨‡g|

Wwqs

GKwU D™ve‡bi KwiMix eYbv ms‡¶wcZ I cZ¨¶xKiY c×wZ‡Z c`kb K‡i Wwqs| GwU D™veb m¤úwKZ Db¥³ Z‡_¨i wKQ Ask, Uj ev djvdj e¨vL¨v Ki‡Z mvnvh¨ K‡i| Wwqs memgq Av‡e`b cwµqvi c‡qvRbxq Ask bq| hw` D™vebwU nq †Kv‡bv wKQ m¤úv`‡bi GKwU cwµqv ev c×wZ, Zvn‡j mvavi YZ Wwqs‡qi c‡qvRb nq bv| Wwqs hw` AZ¨vek¨K nq, Zvn‡j AvbôwbK wbqg G¸‡jvi MnY‡hvM¨Zv wbaviY K‡i †`q|

Wwqs‡qi D`vniY

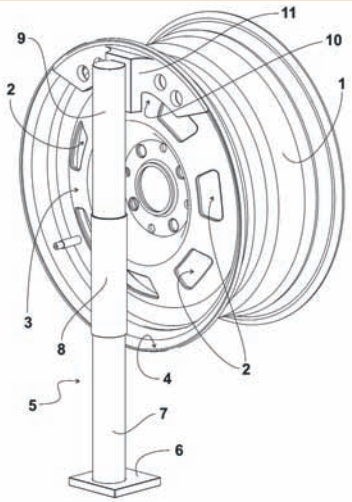

R¨vK ev ÔUvqvi wiwjR wWfvBmÔ ev Uvqvi †Lvjvi GKwU h‡ši †c‡U›U bs n‡"Q wWB 10230179| GB D™vebwU Mwoi w¯cs-AvewZZ PvKv D‡Ëvj‡bi †¶‡Î GKwU Awfbe R¨vK mieivn K‡i| GUv GKwU mv‡cvU ÷vKPvi ev KvVv‡gv e¨envi K‡i (11) †hUv RwoZ _v‡K PvKvi (1) evB‡ii wi‡gi (4) m‡½| R¨vKwU mivmwi PvKv mwi‡q _v‡K, Mwoi kixi‡K bq| G Kvi‡Y, gwU †_‡K PvKv D‡Ëvjb Ki‡Z R¨v‡Ki ¯í kw³B h‡_ó|

mvims‡¶c

D™veb wel‡q GKwU msw¶ß weeiY n‡"Q mvi ms‡¶c ev A¨ve÷v±| †c‡U›U Awd‡mi gva¨‡g hLb GKwU †c‡U›U cKwkZ nq, GB mvims‡¶cwU ZLb c_g côvq Ašf³ nq| KLbI KLbI GB mvims‡¶c mswkó †c‡U›U Awd‡mi †c‡U›U cix¶‡Ki gva¨‡g cwigwRZ n‡q _v‡K|

†c‡U›U mi¶v †c‡Z KZw`b jv‡M?

GKwU †c‡U›U Ab‡gv`‡bi Rb¨ †c‡U›U Awdm †hmgq wb‡q _v‡K Zv †`k †_‡K †`‡k D‡jŁ‡hvM¨ gvÎvq †ni‡di nq| GQvov GUv wbfi K‡i †Kvb chw³MZ †¶‡Î †c‡U›UwU c‡hvR¨ n‡e Zvi Dci| GiRb¨ K‡qK gvm †_‡K K‡qK eQi chš mgq jvM‡Z cv‡i, mvavibZ GwU 2 †_‡K 5 eQ‡ii g‡a¨ n‡q _v‡K| ‡Kvb †Kvb †c‡U›U Awdm `“Z Ab‡gv`‡bi wKQ D‡`¨vM wb‡q‡Q, †hUv we‡kl cwiw¯wZ‡Z Av‡e`bKvixi Ab‡iv‡ai wfwË‡Z gÄi Kiv nq|

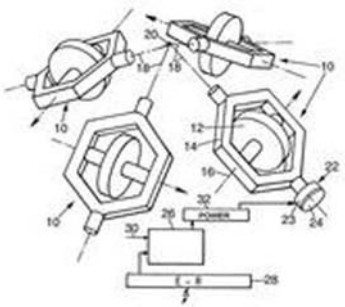

AvšRwZK Av‡e`b bs wc wm wU/Gd Avi/2004/000264| RvB‡ivmKwcK A¨vK‡qU‡ii gva¨‡g GKwU DcM‡ni AvPiY wbqš‡Yi wWfvBm|

GKwU Ab‡gw`Z †c‡U‡›Ui g`Y ‡kvab

†c‡U›U gÄ‡ii ci mcwwik Kiv n‡"Q †hb †c‡U›UwUi AvMv‡Mvov g`Y ‡kvab Kiv nq| †Kv‡bv fj nqwb ev kã ev` c‡owb, we‡kl K‡i `wei †¶‡Î, Zv wbwðZ Kiv AZ¨š Ri"wi|

†Kvb ZwiL †_‡K Avcbvi †c‡U›U miw¶Z?

†c‡U›U Ab‡gv`‡bi ZwiL †_‡K Avcbvi AwaKvi KvhKi n‡e, gÄ‡ii ci Avcwb ZZxq †Kv‡bv c¶ KZK gva¨‡g G D™ve‡bi Abb‡gw`Z e¨envi cwZ‡iv‡a AvBbMZ e¨e¯v wb‡Z cvi‡eb| †Kv‡bv †Kv‡bv †`‡k, †c‡U›U gÄ‡ii ci Avcwb j•NbKvixi wei"‡× gvgjv Ki‡Z cvi‡eb, †hLv‡b j•N‡bi NUbwU N‡U‡Q †c‡U›U Av‡e`b cÎ cKv‡ki ZwiL †_‡K (mvaviYZ c_g Av‡e`bcÎ `wL‡ji 18 gvm ci) †c‡U›U Ab‡gv`‡bi Zwi‡Li ga¨eZx mg‡qi g‡a¨| †c‡U›U cKvk I Ab‡gv`‡bi ga¨eZx mg‡qi g‡a¨ Abb‡gw`Z e¨env‡ii wei"‡× Avcwb ¶wZciYI `we Ki‡Z cv‡ib| wKš, me‡`‡k G mweav †bB (†c‡U›U KvhKixKi‡Yi Ici Av‡iv Z‡_¨i Rb¨ †`Lb côv 39 †_‡K 41)|

†Kvb †Kvb †`‡k, GKB D™ve‡bi Rb¨ GKwU †c‡U›U Av‡e`b I GKwU BDwUwjwU g‡Wj Av‡e`b Kiv hvq| †c‡U›U gÄ‡ii AvM chš mg‡qi Rb¨ BDwUwjwU g‡Wj mi¶v †_‡K (†hUv mvaviYZ `“Z Ab‡gv`b Kiv nq) jvfevb nIqvi Rb¨B mvaviYZ GUv Kiv n‡q _v‡K|

www.wipo.int/sme/

†c‡U›U mi¶v KZw`b wU‡K _v‡K?

eZgvb AvšRwZK gvb`Ê Abhvqx Av‡e`bcÎ `wL‡ji ZwiL †_‡K **20 eQi** chš mi¶v _v‡K, Z‡e kZ _v‡K †h, bevqb I i¶Yv‡e¶Y wd h_v mg‡q cwi‡kva Kiv n‡e Ges G mg‡qi g‡a¨ GUv ewZj Kivi †Kv‡bv Av‡e`b Kiv n‡e bv|

GUv hw`I GKwU †c‡U‡›Ui AvBbMZ †gqv` wb‡`k K‡i, wKš **†c‡U‡›Ui e¨emvwqK ev A_©bwZK †gqv`** †kl n‡q hv‡e hw` Gi AvIZvf³ chw³ †m‡K‡j n‡q hvq, hw` GUv ewYwR¨KxKiY Kiv bv hvq A_ev GB †c‡U‡›Ui Ici wfwË K‡i Drcw`Z cY¨ evRv‡i mdj bv nq| Gme cwiw¯wZ‡Z, †c‡U›U gvwjK †c‡U‡›Ui i¶Yv‡e¶Y ev bevqb wd cwi‡kva bv Kivi wm×vš wb‡Z cv‡ib, 20 eQ‡ii mi¶v †kl nIqvi Av‡MB GUv †gqv` DËxY K‡i †d‡j ivL‡Z cv‡ib Ges Gfv‡e, GUv memvavi‡Yi Rb¨ Db¥³ K‡i w`‡Z cv‡ib|

†Kvb †Kvb †`‡k, mi¶vi †gqv` 20 eQi †_‡K evov‡bv †h‡Z cv‡i ev we‡kl †Kv‡bv cwiw¯wZ‡Z GKwU **mvwcc‡g›Uwi †cv‡UKkb mvwUwd‡KU** (SPC) gÄi Kiv †h‡Z cv‡i| GUv c‡hvR¨ nq mvaviYZ Ila †Kv¤úvwbi †c‡U‡›Ui †¶‡Î| Dch³ miKwi KZc‡¶i KvQ †_‡K wej‡¤ evRviRvZKi‡Yi Ab‡gv`b cvIqvi Kvi‡Y mvaviYZ GUv gÄi Kiv nq| SPC' il †gqv` mxwgZ, mvaviYZ 5 eQ‡ii †ewk nq bv|

†c‡U›U gjZwe

A‡bK †Kv¤úvwb Zv‡`i c‡Y¨ D™veb h³ K‡i wj‡L _v‡K Ô‡c‡U›U †cwÛsÕ ev Ô‡c‡U›U A¨vcvBW diÕ, KLbI KLbI GLv‡b †c‡U›U Av‡e`b b¤il msh³ _v‡K| GKB fv‡e, hLb †c‡U›UwU Ab‡gvw`Z nq, AwaKvsk †Kv¤úvwbi †¶‡Î †`Lv hvq †h Zviv c‡Y¨ GKwU †bwUk msh³ Ki‡Q, †hLv‡b †jLv _v‡K cY¨wU †c‡U›UKZ, KLbI KLbI †c‡U›U b¤iwUil D‡jŁ _v‡K| hw`I G RvZxq c`‡¶c AwaKvi j•N‡bi wei“‡× AvBbMZ †Kv‡bv mi¶v c`vb K‡i bv, ZeI be cewZZ cY¨wU mvgwMK fv‡e ev AskZ bKj Kiv †_‡K Ab¨‡`i wbi“rmvwnZ Ki‡Z GUv GKwU mZKxKiY evZv wn‡m‡e KvR K‡i|

†c‡U›U Av‡e`b `wL‡ji †¶‡Î wK GKRb †c‡U›U G‡R›U c‡qvRb?

†c‡U›U Av‡e`bcÎ `wLj Kiv †_‡K Gi Ab‡gv`b ¯i chš cwZwU welq bRi ivLv GKwU RwUj KvR| †c‡U›U mi¶vi Av‡e`‡bi A_ n‡"Q :

- Avcbvi D™veb‡K A‡c‡U›U‡hvM¨ Ki‡Z cv‡i Ggb †Kv‡bv cvqi AvU wPwýZ Kivi D‡Ï‡k¨ GKwU cvqi AvU AbmÜvb cwiPvjbv;
- AvBbMZ I KwiMix cwifvlvmn D™veb wel‡q `wwe Ges cYv½ weeiY †jLv;
- RvZxq ev AvÂwjK †c‡U›U Awd‡mi m‡½ †hvMv‡hvM, we‡kl K‡i †c‡U›U Av‡e`b c‡Îi ¯Zš cix¶vi mgq;

†c‡U›U bs Bwc 1165393|
ÔGKwU cvÎ †_‡K GKB m‡½ Zij Xvjv Ges †mB Zi‡j evZvm wgkY Kivi Dch³ GKwU Zij Xvjvi hšÔi Ici †c‡U›U K‡i Ui‡eb dvbevg bv‡gi †Kv¤úvwb| †Wbgv‡Ki GKwU Gm Gg B cwZôvb †gb G/Gm-Gi Kv‡Q Gi jvB‡mÝ c`vb Kiv nq Ges GUv GLb †mB †Kv¤úvwbi me‡P‡q †ewk wewµZ cY¨|

- †c‡U›U Awdm KZK wb‡`wkZ Av‡e`bc‡Î c‡qvRbxq cwigvRbv|

G RvZxq me Kv‡Ri Rb¨ c‡qvRb nq †c‡U›U AvBb I †c‡U›U Awd‡mi wbqg-Kvbb m¤ú‡K Mfxi Ávb|

G Kvi‡Y, hw` I **AvBbMZ ev KwiMix mnvqZv MnY eva¨ZvgjK bq,** Zel GUv Mn‡Yi †**Rvi‡jv mcwik** Kiv n‡"Q| G‡¶‡Î Ggb GKRb †c‡U›U G‡R‡›Ui Ici wbfi Kivi mcwik Kiv n‡"Q hvi i‡q‡Q c‡qvRbxq AvBwb Ávb I we‡klÁZv, cvkvcwk D™ve‡bi KwiMix †¶Î m¤ú‡K avivYv| AwaKvsk AvB‡b we‡`wk Av‡e`bKvixi †¶‡Î mswkó †`‡ki GKRb wbewÜZ †c‡U›U G‡R‡›Ui gva¨‡g cwZwbwaZ Kiv eva¨ZvgjK|

GKwU gvÎ Av‡e`‡bi gva¨‡g wK GKwaK D™veb mi¶vi Av‡e`b Kiv hvq?

AwaKvsk †c‡U›U AvBb GKwUgvÎ †c‡U›U Av‡e`‡bi g‡a¨ Ašf³ GKwaK wfb wfb D™ve‡bi †¶‡Î wbw`ó wKQ mxgve×Zv Av‡ivc K‡i _v‡K| G RvZxq mxgve×Zvi g‡a¨ i‡q‡Q Z_v Kw_Z D™ve‡bi mgRvZxqZvi eva¨evaKZv ev **BDwbwU Ae Bb‡fbkb**| †Kvb †Kvb †c‡U›U Awdm BDwbwU Ae Bb‡fbk‡bi †¶‡Î Ab¨ ai‡bi wKQ eva¨evaKZv Av‡ivc K‡i (†hgb, h³iv‡ói †c‡U›U AvBb), Ab¨w`‡K Ab¨ †c‡U›U Awdm¸‡jv (†hgb, BD‡ivcxqvb †c‡U›U Kb‡fbkb Ges †c‡U›U †KvAcv‡ikb wUwU) GKwU gvÎ Av‡e`b c‡Îi g‡a¨ Ašf³ D™ve‡bi GKwU †kYx‡K Ab‡gv`b c`vb K‡i, †h¸‡jv GZUvB ci¯úi msh³ †h GKwU ÔD™veb Kkj aviYvÕ ev **Bb‡fbwUf Kb‡mÞ** MVb K‡i| †hme †¶‡Î D™veb¸‡jv mgRvZxq bq †mme †¶‡Î Av‡e`bKvix‡K nq D™veb mswkó `we mxwgZ Kivi c‡qvRb nq ev GKwaK Av‡e`bcÎ Dc¯vc‡bi c‡qvRb nq (wefvR¨ Av‡e`b)| Dch³ AvB‡bi g‡a¨ cv_‡K¨i Kvi‡Y, †Kv‡bv †Kv‡bv †`‡k GKwU gvÎ †c‡U›U Av‡e`b h‡_ó,Avevi †Kv‡bv †Kv‡bv †`‡k GKB `we AvIZvf³ Ki‡Z `B ev Z‡ZwaK Av‡e`bcÎ `wL‡ji c‡qvRb nq|

mvgwi †PKwj ÷

- **Avcbvi D™vebwU wK †c‡U›U‡hvM¨?** cvqi AvU AbmÜvb cwiPvjbv Ki“b Ges †c‡U›U WvUv‡e‡Ri mØ¨envi Ki“b|
- **†c‡U›U Av‡e`bcÎ `wLj:** mswkó chw³ †¶‡Î AwfÁ GKRb †c‡U›U G‡R›U/A¨vUwb wb‡qv‡Mi c‡qvRbxqZv we‡ePbv Ki“b, we‡kl K‡i †c‡U›U `wei Lmov c¯‡Zi Rb¨|
- **Av‡e`b `wL‡ji Dch³ mgq:** †c‡U›U Av‡e`bcÎ ZvovZwo/wej‡¤ `wL‡ji KviY¸‡jv we‡ePbv Ki“b Ges Avcbvi †c‡U›U Av‡e`bcÎ `wL‡ji Dch³ mgqwU wPšv Ki“b|
- Av‡M †_‡KB **D™veb welqK Z_¨ cKvk Ki‡eb bv** †hUv Gi †c‡U›U‡hvM¨Zv‡K ¶Y Ki‡Z cv‡i|
- **i¶Yv‡e¶Y wd:** Avcbvi †c‡U‡›Ui KvhKwiZv i¶v Ki‡Z i¶Yv‡e¶Y I bevqb wd cwi‡kv‡ai K_v fj‡eb bv|

3. wfb †`‡k †c‡U›U Kiv

wfb †`‡k †Kb †c‡U›U Av‡e`b Ki‡eb?

†c‡U›U n‡"Q **AÂjMZ AwaKvi** (†Uwi‡Uwiqvj ivBUm), Gi A_ n‡"Q GKwU D™veb †Kejgv**Î** †mB †`k ev AÂ‡j miw¶Z n‡e †hLv‡b GUv Ab‡gvw`Z n‡e| Ab¨ K_vq, GKwU wbw`ó †`‡k hw` Avcbvi †c‡U›U Ab‡gvw`Z bv nq Zvn‡j †mB †`‡k D™vebwU miw¶Z _vK‡e bv, ‡h KvD‡K †mB †`‡k Zv ˆZwi, e¨envi, Avg`wb ev wewµi AwaKvi c`vb Ki‡e|

we‡`‡k †c‡U›U mi¶v Avcbvi †Kv¤úvwb‡K H me †`‡k †c‡U›UKZ D™veb wel‡q GK‡PwUqv AwaKvi Dc‡fv‡Mi mweav c`vb Ki‡e| GQvov, wfb †`‡k †c‡U›U wbeÜb Avcbvi †Kv¤úvwb‡K H D™veb we‡`wk cwZôvb‡K jvB‡mÝ c`v‡bi m‡hvM †`‡e, AvDU‡mvwms m¤úK Dbqb NUv‡Z Ges Ab¨‡`i m‡½ Askx`wi‡Zi wfwË‡Z Hme †`‡ki evRvi¸‡jv‡Z c‡e‡ki mweav c`vb Ki‡e|

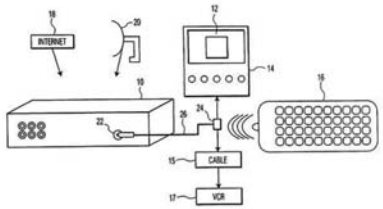

AvšRwZK Av‡e`b bs wcwmwU/BD Gm 02/12182| wi‡gvU K‡›Uvj wm‡÷g cwiea‡bi DcKiY|

we‡`‡k †c‡U›U mi¶vi Av‡e`b KLb Kiv DwPZ?

GKwU wbw`ó D™ve‡bi †¶‡Î c_g evi Av‡e`‡bi ZwiL‡K e‡j AMwaKvigjK ZwiL ev **cvqwiwU** †WU Ges cieZx mg‡q Ab¨ †`k¸‡jv‡Z **12 gv‡mi** g‡a¨ (A_vr **cvqwiwU mg‡qi** g‡a¨) `wLj Kiv Av‡e`b ceeZx Av‡e`b †_‡K mweav cv‡e Ges cvqwiwU Zwi‡Li ci Ab¨ †Kv‡bv †Kv¤úvwbi gva¨‡g GKB D™veb wel‡q `wLj Kiv Av‡e`b †_‡Kl †mUv AMwaKvi cv‡e| GKvi‡Y cvqwiwU Zwi‡Li g‡a¨B wfb †`‡k †c‡U›U Av‡e`bcÎ `wLj †Rviv‡jv fv‡e mcwik Kiv n‡"Q|

cvqwiwU mg‡qi †gqv` †kl n‡j Ges †c‡U›U Awd‡mi gva¨‡g †c‡U›UwU c_gevi cKv‡ki AvM chš (mvaviYZ cvqwiwU Zwi‡Li ci **18 gvm**) Ab¨ †`k¸‡jv‡Z GKB D™veb wel‡q mi¶vi Av‡e`b Kiv m‡hvM Avcwb cv‡eb, wKš Avcwb Avcbvi ceeZx Av‡e`‡bi AMwaKvi Avi `wwe Ki‡Z cvi‡eb bv| D™vebwU cKwkZ ev D‡b¥wPZ nlqvi ci, we‡`‡k †c‡U›U mi¶v jv‡fi m‡hvM nviv‡eb Avcwb, †h‡nZ D™vebwUi AwfbeZ Avi Aewkó _v‡K bv|

www.wipo.int/sme/

Avcbvi D™vebwU †Kv_vq mi¶v Kiv DwPZ?

wewfb †`‡k D™veb mi¶v †h‡nZ e¨qeûj GKwU cwµqv, G Kvi‡Y †Kvb †`k¸‡jv‡Z †Kv¤úvwb Zvi D™veb miw¶Z Ki‡Z Pvq †mUv hZ¥ mnKv‡i wbevPb Kiv DwPZ| †Kv_vq †c‡U›U Kiv n‡e Zv wbevP‡bi K‡qKwU †gŠwjK we‡ePbv n‡"Q :

- †c‡U›UKZ cY¨wU †Kv_vq ewYwR¨KxKi‡Yi m¤¢vebv i‡q‡Q?
- mgRvZxq c‡Y¨i cavb evRvi †Kvb¸‡jv?
- cwZwU Uv‡MU evRv‡i †c‡U›U wbeÜ‡bi LiP KZ Ges Avcbvi ev‡RU KZ?
- cavb cwZØw›Ø¸‡jvi Ae¯'vb †Kv_vq?
- cY¨wU †Kv_vq Drcw`Z n‡e?
- GKwU wbw`ó †`‡k †c‡U›U KvhKixKiY KZUv Kómva¨ n‡e?

AvšRwZK Av‡e`b bs wcwmwU/AvBwU 98/00133| wj‡bbvBRW KK wbgvY cwµqvi GKwU bZb c×wZ mswkó GB D™vebwU BZwjq †Kv¤úvwb wMwÛ GmAviGj-Gi mvd‡j¨i gj PweKwV| †c‡U›U c`Ë GK‡PwUqv AwaKvi PPv K‡i GKwU bZb †UKvUvBj mZv ewYwR¨KxKiY Ki‡Q GB cwZôvbwU|

we‡`‡k †c‡U›U mi¶vi Av‡e`b Kxfv‡e Ki‡eb?

we‡`‡k GKwU D™veb mi¶vi wZbwU cavb c×wZ i‡q‡Q :

RvZxq i"U: Avcwb †h †`k¸‡jv‡Z AvMnx †m †`k¸‡jvi c‡Z¨KwUi RvZxq †c‡U›U Awd‡m Dch³ fvlvq I wd cwi‡kv‡ai gva¨‡g †c‡U›U Av‡e`b Ki‡Z cv‡ib| GB c_wU †ek RwUj Ges †`‡ki msL¨v †ewk n‡j LiPI †ewk n‡e|

AvÂwjK i"U: GKwU AvÂwjK †c‡U›U e¨e¯'vi Aax‡b hLb GKwaK †`k m`¨ _v‡K, ZLb mswkó AvÂwjK Awd‡m Av‡e`bcÎ `wL‡ji gva¨‡g Avcwb Hme †`k¸‡jv‡Z †c‡U›U miw¶Z Ki‡Z cv‡ib| AvÂwjK †c‡U›U Awdm¸‡jv n‡"Q :

- `v AwdKvb B‡›U‡jKPqvj †cvcwU AMvbvB‡Rkb (OAPI) *(www.oapi.wipo.net)*;
- `v AwdKvb wiwRIbvj B‡›U‡jKPqvj †cvcwU AMvbvB‡Rkb (ARIPO) *(www.aripo.wipo.net);*
- `v BD‡iwkqvb †c‡U›U AMvbvB‡Rkb (EAPO) *(www.eapo.org);*
- `v BD‡iwcqvb †c‡U›U Awdm (EPO) *(www.epo.org);*Ges
- `v †c‡U›U Awdm Ae `v Mvjd †KvAcv‡ikb KvDwÝj *(www.gulf-patent-office.org.sa)*

AvšRwZK i“U : Avcbvi †Kv¤úvwb hw` †c‡U›U †KvAcv‡ikb wUwUi m`m¨ †`k¸‡jv‡Z GKwU D™veb miw¶Z Ki‡Z AvMnx nq, †m‡¶‡Î GKwU AvšRwZK PCT Av‡e`b `wL‡ji welqwU we‡ePbv Kiv DwPZ| GUv Kivi †¶‡Î, Avcbv‡K Aek¨B PCT Pw³f³ †Kv‡bv †`‡ki bvMwiK ev Awaevmx n‡Z n‡e ev Hme †`k¸‡jvi †h †Kv‡bv GKwU‡Z Avcbvi GKwU mwZ¨Kv‡ii Ges KvhKi wkí ev ewYwR¨K Dcw¯wZ _vK‡Z n‡e| PCT·i Aax‡b GKwU gvÎ AvšRwZK Av‡e`b Rgv w`‡q, Avcwb PCT f³ 134 wUi I †ewk m`m¨ †`‡k GKBm‡½ GKwU D™ve‡bi †c‡U›U mi¶v PvB‡Z cv‡ib (mshw³ 2 †`Lb)| PCT Av‡e`bcÎwU Rgv †`qv hvq RvZxq ev AvÂwjK †c‡U›U Awd‡m Ges/A_ev mBRvij¨v‡Ûi †R‡bfvq Aew¯Z AvšRwZK †gav m¤ú` Awd‡mi (WIPO) PCT MnYKvix Kvhvj‡q|

AvšRwZK Av‡e`b bs wcwmwU/BD Gm 2001/028473| Gbwf‡iv¯ve †UK‡bvjwRm Ki‡cv‡ikb GKwU Av‡gwiKvb GmGgB| `nb I wkímsµvš cwµqv †_‡K GKwaK welv³ c`v_ Acmvi‡Yi chw³wU Zviv we‡`‡ki K‡qKwU evRv‡i †c‡U›U mi¶vi Rb¨ wcwmwÛi gva¨‡g Av‡e`b K‡i| we‡`‡k mi¶vi †¶‡Î wcwmwU e¨envi K‡i Av‡e`b Kivi d‡j Gbwf‡iv¯ve Zv‡`i GB chw³i ˆewkK evRviRvZKi‡Y GKwU jvB‡mwÝs Pw³‡Z DcbxZ nq|

mvgvwi †PKwj ÷

- **AÂjMZ AwaKvi** (†Uwi‡Uvwiqvj ivBUm)| g‡b ivL‡eb †c‡U›U n‡”Q AÂjMZ AwaKvi|
- **AMwaKvigjK mgq** (cvqwiwU wcwiqW)| we‡`‡k †c‡U›U mi¶vi †¶‡Î AMwaKvi-gjK mgq e¨envi Ki“b| wKš mgq mxgvi m‡hvM nviv‡eb bv, †hUv we‡`‡k Avcbvi †c‡U›U jv‡f cwZeÜKZv wn‡m‡e †`Lv w`‡Z cv‡i|
- **†Kv_vq Av‡e`b Ki‡eb|** †Kv_vq mi¶v †_‡K jvfevb n‡eb †mUv we‡ePbv Ki“b Ges wewfb †`‡k mi¶vi Li‡Pi welqwU gv_vq ivLb|
- **wKfv‡e Av‡e`b Ki‡eb|** Av‡e`b cwµqvq mnvqZv wb‡Z PCT e¨envi‡i K_v we‡ePbv Ki“b, mgq wbb Ges †c‡U›U‡hvM¨Zv m¤úwKZ Z_¨ msMn Ki“b, hvi Ici wfwË K‡i Avcwb Ab¨Î †c‡U›U mi¶vi wel‡q wm×vš wb‡Z cvi‡eb|

www.wipo.int/sme/

PCTÔi mweavmgn

PCT 12 gv‡mi AMwaKvigjK mg‡qi Ici b¨bZg **AwZwi³ 18 gvm** mgq c`vb K‡i, †h mg‡qi g‡a¨ Av‡e`bKvix wewfb †`‡k Zv‡`i c‡Y¨i ewYwR¨K m¤¢vebvi †LvR Ki‡Z cv‡i Ges wm×vš wb‡Z cv‡i †Kv_vq †c‡U›U mi¶v PvB‡e| Gfv‡e wd cwi‡kva Ges RvZxq Av‡e`b c‡Îi †¶‡Î RwoZ Abev` LiP c`v‡bi welqwU I wejw¤Z Kiv hvq| Av‡e`bKvixiv hZUv m¤¢e `xN mgq weKí e¨e¯v Db¥³ ivL‡Z PCT e¨envi K‡i _v‡Kb|

PCT Av‡e`bKvixiv PCT **AvšRwZK AbmÜvb wi‡cv‡Ui** (B›Uvib¨vkbvj mvP wi‡cvU) AvKv‡i Ges **AvšRwZK AbmÜvb KZc‡¶i wjwLZ gZvg‡Zi** wfwË‡Z Zv‡`i D™ve‡bi m¤¢ve¨ †c‡U›U‡hvM¨Zv m¤‡Ü **gj¨evb Z_¨** †c‡q _v‡K| GBme KvMRcÎ PCT Av‡e`bKvix‡`i GKwU `p wfwË c`vb K‡i, hvi Dci wbfi K‡i Zviv wm×vš wb‡Z cv‡i †Kv_vq Zv‡`i †c‡U›U mi¶v Ki‡Z n‡e| AvšRwZK AbmÜvb wi‡cv‡U _v‡K mviv we‡ki cvqi AvU Z_¨vejxi GKwU Zwj Kv, †h¸‡jv D™ve‡bi m‡½ mswkó| AvšRwZK AbmÜvb wi‡cv‡Ui Av‡jv‡K AvšRwZK AbmÜvb KZc‡¶i wjwLZ gZvgZ m¤¢ve¨ †c‡U›U‡hvM¨Zv we‡kl‡Y K‡i _v‡K|

†Kej GKwU fvlvq I GK †mU wdÔmn, GKwU gvÎ PCT Av‡e`bc‡Îi AvBbMZ KvhKwiZv me PCT m`m¨ †`k¸‡jv‡Z c‡hvR¨| GB mweav cwZwU †c‡U›U Awd‡m Avjv`v Avjv`v K‡i Av‡e`bcÎ `wL‡ji **cv_wgK Abev` LiP nvm** K‡i| wKQ AvÂwjK †c‡U›U e¨e¯vi Aax‡bI Av‡e`bcÎ Rgv †`qvi Kv‡R PCT e¨envi Kiv †h‡Z cv‡i| PCTÔi Aax‡b wKfv‡e GKwU AvšRwZK Av‡e`bcÎ `wLj Kiv hvq †m welqK wb‡`kbv cvIqv hv‡e Avcbvi †`‡ki †c‡U›U Awdm †_‡K Ges *www.wiop.int/pct* I‡qemvB‡U|

PCT Av‡e`b cwµqvi i/c‡iLv

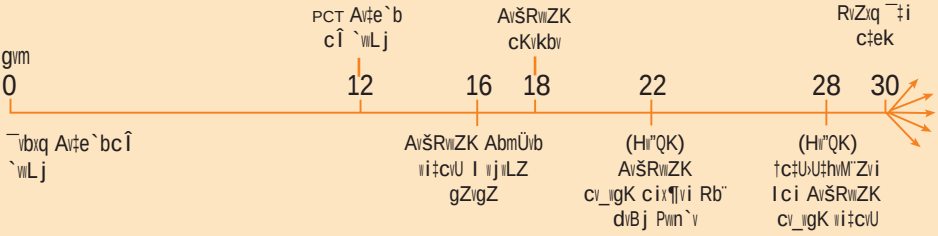

4.†c‡U›UKZ chw³ ewYwR¨KxKiY

†c‡U›UKZ chw³ wKfv‡e ewYwR¨KxKiY Ki‡eb?

GKwU †c‡U›U Gi wbR¯ †hvM¨Zv e‡j ewYwR¨K mdjZvi wbðqZv w`‡Z cv‡i bv| GUv GKwU Uj ev A¯ †hUv GKwU †Kv¤úvwb‡K Zvi D™veb †_‡K jvfevb nIqvi m¶gZv c`vb K‡i| †Kv¤úvwb‡K GKwU `wóMvn¨ mweav †c‡Z KvhKi fv‡e †c‡U›U e¨envi Kiv c‡qvRb Ges mvaviYZ ZLbB GUv mdj n‡e, hLb GB †c‡U‡›Ui wfwË‡Z ˆZwi †Kv‡bv cY¨ evRv‡i mdj n‡e ev †Kv¤úvwbi mbvg ev `i KlvKwli ¶gZv evov‡e| GKwU †c‡U›UKZ D™veb evRv‡i Avb‡Z, GKwU †Kv¤úvwbi nv‡Z †ek KZK¸‡jv Ackb _v‡K:

- †c‡U›UKZ D™vebwU mivmwi ewYwR¨KxKiY Kiv;
- Ab¨ Kv‡ivi Kv‡Q †c‡U›U wewµ K‡i †`qv;
- Ab¨‡`i Kv‡Q †c‡U‡›Ui jvB‡mÝ †`qv;
- Zv‡`i m‡½ †hŠ_ Askx`wiZ ev Ab¨vb¨ †KŠkjMZ †RvU cwZôv Kiv, hv‡`i cwiciK m¤ú` i‡q‡Q|

GKwU †c‡U›UKZ cY¨ wKfv‡e evRv‡i Avb‡eb?

evRv‡i GKwU bZb c‡Y¨i ewYwR¨K mdjZv †Kejgvi †m c‡Y¨i KwiMix w`K¸‡jv m¤‡Ü Bw½Z †`q bv| KwiMix w`‡K †_‡K D™vebwU hZB gnvb †nvK bv †Kb, hw` Gi †Kv‡bv KvhKi Pvwn`v bv _v‡K ev cY¨wU hw` h_vh_fv‡e evRviRvZ Kiv bv hvq Zvn‡j †fv³v‡`i AvKó nIqvi m¤vebv KgB _v‡K| ewYwR¨K mdjZv,G Kvi‡Y, Ab¨vb¨ A‡bK wel‡qi Ici wbfi K‡i, Gi g‡a¨ i‡q‡Q c‡Y¨i wWRvBb, Aw_K m¤ú‡`i cvc¨Zv, KvhKi wecYb †KŠkj Dbqb Ges cwZ‡hvwM‡`i cY¨ ev cwiciK c‡Y¨i m‡½ Gi Zjbvgj K `vg|

GKwU be cewZZ cY¨ evRv‡i Avb‡Z mvaviYZ GKwU **e¨emwqK cwiKíbv** Dbqb LeB mnvqK fwgKv cvjb K‡i _v‡K| GKwU e¨emwqK aviYvi Dc‡hvwMZv cix¶vi †¶‡Î KvhKi DcKiYwU n‡"Q e¨emwqK cwiKíbv| GKwU bZb cY¨ evRv‡i Avbvi c‡qvRbxq Aw_K m¤ú` AR‡b wewb‡qvMKvix‡`i AvKó Ki‡Z e¨emwqK cwiKíbv LeB c‡qvRbxq| e¨emwqK cwiKíbvq Avcbvi †Kv¤úvwbi †c‡U›U m¤úwKZ Z_¨ Ges †c‡U›U †KŠkjI ¸i"ZcY, †h‡nZ GUv Avcbvi †Kv¤úvwbi c‡Y¨i AwfbeZ cKv‡ki GKwU kw³kvjx wb‡`kK, Aa¨vemv‡qi cgvY| ZvQvov, GUv Ab¨ †Kv¤úvwbi †c‡U›U j•N‡bi SwK I nvm K‡i|

†c‡U›U wK wewµ Ki‡Z cv‡ib?

n¨v, GUv‡K e‡j †c‡U‡›Ui ¯Zwb‡qvM Ges GUv ¯vqx fv‡e Ab¨ e¨w³i Kv‡Q gwjKvbv n¯vši K‡i| G RvZxq wm×vš AZ¨š †f‡e wP‡š †bqv DwPZ|

¯Z wb‡qv‡Mi cwie‡Z jvB‡mÝ w`‡q Avcwb †c‡U‡›Ui †gqv`Kvjxb mgq chš iq¨vjwU †c‡Z cv‡ib| G Kvi‡Y jvB‡mÝ c`vb n‡Z cv‡i Aw_K fv‡e `vi"b GK †KŠkj| Ab¨w`‡K, ¯Z wb‡qv‡Mi A_ n‡"Q Avcwb iq¨vjwU QvovB GKKvjxb UvKv cv‡eb, Zv †mB †c‡U›U cieZx mg‡q hZB jvfRbK n‡q DVK bv †Kb|

wKQ wKQ cwiw¯wZ‡Z †c‡U‡›Ui ¯Zwb‡qvM mweavRbK e‡j we‡ewPZ n‡Z cv‡i| GKKvjxb A‡_i wewbg‡q †Kv‡bv †c‡U›U hw` wewµ Kiv nq, Zvn‡j Avcwb Zr¶Yvr gj¨ †c‡q hvb| GRb¨ 20 eQi a‡i A‡c¶vi c‡qvRb nq bv| ZvQvov, Av‡iKwU chw³i gva¨‡g †c‡U›UwU †m‡K‡j n‡q hvIqvi SwKI Avcwb Gov‡Z cv‡ib| GQvov, GKwU ÷vU-Avc †Kv¤úvwbi Kv‡Q †c‡U‡›Ui ¯Zwb‡qvM A_vq‡bi cekZ n‡Z cv‡i, hw` †c‡U›UwU †Kv¤úvwbi AwaKv‡i bv _v‡K|

cwZwU †¶‡Î, Avcbvi c‡qvRb I AMvwaKv‡ii wfwË‡Z †mUv n‡e Avjv`v Avjv`v wm×vš| Z‡e, †c‡U‡›Ui ¯Zwb‡qv‡Mi mcvwik mvaviYZ Kiv nq bv Ges †c‡U›U gwjKiv mvaviYZ D™ve‡bi Ici gwjKvbv a‡i ivL‡Z cQ›` K‡ib Ges jvB‡mÝ w`‡Z †ewk gvÎvq AvMnx _v‡Kb|

A‡b¨i e¨env‡ii Rb¨ wKfv‡e Avcbvi †c‡U‡›Ui jvB‡mÝ c`vb Ki‡eb?

GKwU †c‡U‡›Ui jvB‡mÝ ZLbB c`vb Kiv nq hLb †c‡U›U gwjK (jvB‡mÝi) Ab¨ KvD‡K (jvB‡mÝ) ci¯úi m¤§Z D‡Ï‡k¨ †c‡U›UKZ D™vebwU e¨env‡ii Ab‡gv`b c`vb K‡ib| G‡¶‡Î, `ÖÖc‡¶i g‡a¨ GKwU jvB‡mÝs Pw³ ¯v¶wiZ nq, †hLv‡b Pw³i kZ I AvIZv D‡jL _v‡K|

GKwU jvB‡mÝs Pw³i gva¨‡g Avcbvi †c‡U›UKZ D™veb Ab¨ KvD‡K ewYwR¨Kfv‡e e¨envi‡ii Ab‡gv`b c`vb Avcbvi e¨emvq ivR¯ Av‡qi GKwU AwZwi³ Drm c`vb Ki‡e| GKwU D™ve‡bi Ici †Kv¤úvwbi GK‡PwUqv AwaKvi PPvi mvaviY wbqg n‡"Q GUvB|

jvB‡mÝ c`vb ZLbB mnvqK hLb †c‡U›U gwjK cY¨wU ˆZwi Kivi Ae¯vq _v‡Kb bv A_ev GKwU wbw`ó evRv‡ii Pwn`v †gUv‡bvi gZ h‡_ó cwigv‡Y ˆZwii Ae¯v‡b _v‡Kb bv ev GKwU wbw`ó †fŠ‡MwjK AÂj AvIZvf³ Kivi Ae¯vq _v‡Kb bv|

jvB‡mÝ Pw³i Rb¨ `¶ZvcY mg‡SvZv I Lmov cYq‡bi c‡qvRb nq, G Kvi‡Y jvB‡mÝs Pw³i Lmov ˆZwi I kZ D‡j‡Li †¶‡Î GKRb jvB‡mÝs cvKwUkbv‡ii mnvqZv †bqvi civgk †`qv n‡"Q| †Kv‡bv †Kv‡bv †`‡k, miKwi GKwU wbqšK KZc‡¶i gva¨‡g jvB‡mÝs Pw³ wbeÜ‡bi c‡qvRb nq|

†c‡U‡›Ui Rb¨ Avcwb iq¨vjwUi nvi KZUv Avkv Ki‡Z cv‡ib?

jvB‡mwÝs Pw³‡Z, †c‡U›U gwjK mvaviYZ GKKvjxb A_ Ges/ev eQi †k‡l iq¨vjwUi gva¨‡g A_ †c‡q _v‡Kb, †hUv jvB‡mÝKZ c‡Y¨i (GKK cwZ iq¨vjwU) wewµi Ici ev †bU wewµi (†bU weµq-wfwËK iq¨vjwU) Ici n‡Z cv‡i| A‡bK †¶‡Îb, GKwU †c‡U›U jvB‡m‡Ýi cwi‡ZwlK n‡Z cv‡i GKKvjxb A_ I iq¨vjwU DfqB| KLbI KLbI, jvB‡mÝ MnxZvi †Kv¤úvwbi gwjKvbv iq¨vjwUi gva¨‡g ¯jvwfwl³ n‡Z cv‡i|

iq¨vjwUi nv‡ii †¶‡Î gvcKwlV GK GK wk‡í GK GK iKg Ges G e¨vcv‡i civgk mnvqK n‡Z cv‡i| Z‡e GUv g‡b ivLv Ri“wi †h, cwZwU jvB‡mwÝs Pw³B ¯Zš Ges iq¨vjwUi nvi wbfi K‡i mg‡SvZvi we‡kl I AZ¨š ¯vZš¨gjK ˆewk‡ó¨i Ici| G Kvi‡Y, wkímsµvš gvb`Ê G‡¶‡Î cv_wgK wKQ wb‡`kbv w`‡Z cv‡i, wKš G RvZxq gvcKwlVi Ici AwZgvÎvq wbfikxjZv cvqk fj c‡_ wb‡q hvq|

GK‡PwUqv Ges A-GK‡PwUqv jvB‡m‡Ýi g‡a¨ cv_K¨ Kx?

wZb ai‡bi jvB‡mwÝs Pw³ i‡q‡Q| GUv wbfi K‡i jvB‡m‡Ýi msL¨vi Ici :

- **GK‡PwUqv jvB‡mÝ :** †c‡U›UKZ chw³ e¨env‡ii AwaKvi msewjZ GKwU gvÎ jvB‡mÝ, †hUv †c‡U›U gwjK Avi †Kv‡bv fv‡eB e¨envi Ki‡Z cvi‡eb bv|
- **†mvj jvB‡mÝ :** GKwU gvÎ jvB‡mÝ Ges †c‡U›U gwjK GB †c‡U›UKZ chw³ e¨env‡ii AwaKvi iv‡Lb|
- **A-GK‡PwUqv jvB‡mÝ :**GKwaK jvB‡mÝ Ges †c‡U›U gwjK GB †c‡U›UKZ chw³ e¨env‡ii AwaKvi iv‡Lb|

GKwU gvÎ jvB‡mwÝs Pw³‡Z wKQ kZ _vK‡Z cv‡i, Gi g‡a¨ KZK¸‡jv GK‡PwUqvi wfwË‡Z wKQ AwaKvi Ab‡gv`b K‡i Ges Ab¨¸‡jv GKwU †mvj ev A-GK‡PwUqvi wfwË‡Z AwaKvi gÄi K‡i|

GKwU wnU GK‡PÄv‡ii Rb¨ †c‡U›U Av‡e`b K‡ib fviZxq D™veK W. wgjv›` iv‡b Ges g¤vB wfwËK GKwU GmGgBÕi m‡½ GKwU jvB‡mwÝs Pw³ ¯v¶wiZ nq| Pw³‡Z D‡jwLZkZ Abmv‡i, D™veK Pw³ ¯v¶‡ii mgq GKKvjxb A_ jvf K‡ib Ges †bU weµ‡qi Ici 4.5% iq¨vjwUi gwjK nb| GQvov, jvB‡mÝ MnxZv‡K †c‡U›U Av‡e`bcÎ `wLj I i¶Yv‡e¶Y LiP enb Ki‡Z n‡qwQj|

`wIZ cwb cwi‡kva‡bi †c‡U›UKZ c×wZ Dbqb K‡ib †gwKv‡Kvi b¨vkbvj A‡Uvbgvm wekwe`¨vj‡qi M‡elKiv| `wIZ cwb cwi‡kva‡bi bZb mgvavb c`v‡bi Rb¨ cwZwôZ AvBwe-‡UK bv‡gi GKwU cwZôv‡bi Kv‡Q Gi A-GK‡PwUqv jvB‡mÝ c`vb Kiv nq|

www.wipo.int/sme/

Avcbvi †c‡U‡›Ui Rb¨ GK‡PwUqv bv A-GK‡PwUqv jvB‡mÝ gÄi Kiv DwPZ?

GUv wbfi K‡i cY¨ Ges Avcbvi e¨emvwqK †KŠk‡ji Ici| †hgb, Avcbvi chw³ hw` GKwU ÷¨vÛvW ev Av`k chw³ nq, †hUv GKwU wbw`ó evRv‡i e¨emv cwiPvjbvi Rb¨ Ab¨ me cwZ‡hvMx‡`i c‡qvRb n‡e, †m ‡¶‡Î GKwU A-GK‡PwUqv jvB‡mÝ Ab‡gv`b n‡e me‡P‡q mweavRbK| Avcbvi cY¨wU evRv‡i Avb‡Z hw` GKwU †Kv¤úvwbi wekvj As‡Ki wewb‡qvM c‡qvRb nq (A_vr Ila mvgMx, wKwbK¨vj Uvqv‡ji Rb¨ GLv‡b wewb‡qvM c‡qvRb nq), †m ‡¶‡Î GKRb m¤ve¨ jvB‡mÝ MnxZv Ab¨vb¨ jvB‡mÝ MnxZvi KvQ †_‡K cwZ‡hvwMZvi g‡LvgwL n‡Z PvB‡e bv Ges GKwU GK‡PwUqv jvB‡mÝ Ab‡gv`‡bi Rb¨ Pvc w`‡Z cv‡i|

D™veb jvB‡m‡Ýi Dch³ mgq KLb?

Avcbvi D™vebwUi jvB‡mÝ c`v‡bi Dch³ mgq e‡j wKQ †bB, †h‡nZ mgqUv wbfi Ki‡e H we‡kl D™ve‡bi Ici| Z‡e, GKRb ¯vaxb D‡`¨v³v ev D™vebKvixi Rb¨, jvB‡mÝ MnxZv mÜv‡bi welqwU hZ `"Z m¤e ïi" Kiv DwPZ, †hb †c‡U›U Kivi LiP cwl‡q wb‡q gbvdvi cevn wbwðZ Kiv hvq| †c‡U›U Ab‡gv`‡bi Rb¨ A‡c¶v Kivi †Kv‡bv c‡qvRb †bB|

Dch³ mg‡qi cvkvcwk, †c‡U›UKZ D™veb evwYwR¨KxKi‡Yi gva¨‡g jf¨vsk cvevi Rb¨ mwVK Askx`vi L‡R †ei Kivl ¸i"ZcY|

†c‡U‡›Ui gj¨ wbi‡cY

GKwU †Kv¤úvwbi Rb¨ †c‡U‡›Ui gj¨ wbYq †Kb jvfRbK ev c‡qvRb Zvi A‡bK¸‡jv KviY i‡q‡Q| GB KviY¸‡jvi g‡a¨ i‡q‡Q wnmve i¶‡Yi D‡Ïk¨, jvB‡mÝs, GKÎxKiY A_ev Ab¨ †Kv¤úvwb AwaMnY, ¯Zwb‡qvM, †gav m¤ú` µq ev gjab msMn| me cwiw¯wZ‡ZB KvhKi Ggb †Kv‡bv †c‡U›U gj¨ wbi‡cY c×wZ †bB, Z‡e wb‡Pi c×wZ¸‡jv me‡P‡q †ewk e¨eüZ nq|

- **Avq c×wZ :** mewaK e¨eüZ †c‡U›U gj¨ wbi‡cY c×wZ| GB c×wZ ¸i"Z †`q m¤ve¨ Avq cev‡ni Ici, †hUv †c‡U›U gwjK †c‡U‡›Ui †gqv`Kvjxb mg‡qi g‡a¨ †c‡Z hv‡"Qb|
- **e¨q c×wZ :** Af¨šixY ev we‡`‡ki evRv‡i GKB ai‡bi m¤ú` Dbq‡bi LiP wbavi‡Yi gva¨‡g †c‡U‡›Ui gj¨ wbaviY Kiv nq|
- **evRvi c×wZ :** evRv‡i Zjbvgjk †jb‡`‡bi g‡j¨i wfwË‡Z|
- **Ackb-wfwËK c×wZ :** ÷K Ack‡bi gj¨ wbavi‡Yi Rb¨ cv_wgKfv‡e DbqbKZ Ackb gj¨ wbavi‡Yi c×wZi wfwË‡Z|

GQvov Ab¨vb¨ welq i‡q‡Q †hM‡jv msL¨vq e¨³ Kiv KwVb, †hUv GKwU †c‡U‡›Ui g‡j¨i Ici cfve ivL‡Z cv‡i| †hgb, †c‡U›U `weikw³gËv A_ev KvQvKwQ weK‡íi Aw¯Z|

Avcwb hw` cwZ‡hvMx cwZôv‡bi †c‡U‡›Ui cwZ AvMnx †nvb Zvn‡j †mUv e¨env‡ii AbgwZ †c‡Z cv‡ib wK?

Avcbvi cY¨ ev cwµqvq cwZ‡hvMx GKwU cwZôv‡bi gwjKvbvaxb chw³ msh³ Kivi Ab‡gv`b cvIqv memgq mnR bvI n‡Z cv‡i| Z‡e, hw` cwZ‡hvMx Avcbvi †Kv¤úvwbi †c‡U›U e¨env‡i AvMnx nq Zvn‡j Avcwb **µm-jvB‡mwÝs‡qi** K_v we‡ePbv Ki‡Z cv‡ib| wkíKviLvbvq µm-jvB‡mwÝs LeB cPwjZ, †hLv‡b we¯Z cwim‡ii cwiciK D™veb gvÎ K‡qKwU cwZ‡hvMx cwZôv‡bi AwaKv‡i _v‡K| GB ai‡bi cwZ‡hvMx †Kv¤úvwb¸‡jv Ab¨vb¨ cwZ‡hvMx‡`i gwjKvbvaxb †c‡U›U e¨env‡ii AwaKvi ARb K‡i Ges Zv‡`i wbR¯ †c‡U›U Ab¨vb¨ cwZ‡hvMx‡`i e¨env‡ii Ab‡gv`b w`‡q Zv‡`i Kvhµg cwiPvjbvi ¯vaxbZv (wdWg U Acv‡iU) wbwðZ Ki‡Z Pvq|

mvgvwi †PKwj ÷

- **ewYwR¨KxKiY|** Avcbvi †c‡U›UKZ D™veb evRviRv‡Zi wfb wfb c×wZ¸‡jv we‡ePbv Ki“b Ges Avcwb hw` GKwU bZb cY¨ evRv‡i Avbvi wm×vš wb‡q _v‡Kb †m‡¶‡Î wbwðZ Ki“b †h, Avcbvi GKwU `vi“b e¨emwqK cwiKíbv i‡q‡Q|
- **jvB‡mwÝs|** iq¨vjwUi nvi Ges jvB‡mwÝs Pw³i Ab¨vb¨ ˆewkó¨¸‡jv wbavi‡Yi KvRwU n‡q _v‡K mg‡SvZvi gva¨‡g Ges jvB‡mwÝs Pw³i Lmov c¯Z I mg‡SvZvi †¶‡Î GKRb we‡kl‡Ái civgk Mn‡Yi mcwik Kiv n‡”Q|
- **GK‡PwUqv ebvg A-GK‡PwUqv|** GK‡PwUqv ebvg A-GK‡PwUqv jvB‡mÝ Ab‡gv`‡bi KviY¸‡jv we‡ePbv Ki“b, we‡kl K‡i chw³i cYZv Ges Avcbvi †Kv¤úvwbi e¨emwqK cwiKíbvi Av‡jv‡K|
- **µm-jvB‡mwÝs|** Ab¨vb¨ †Kv¤úvwbi c‡qvRbxq chw³i e¨envi wbwðZ Ki‡Z Avcbvi †c‡U›UwU e¨envi Ki‡Z cv‡ib wKbv Zv LwZ‡q †`Lb|

www.wipo.int/sme/

5. †c‡U›U KvhKixKiY

†c‡U›U AwaKvi †Kb KvhKi Kiv DwPZ?

Avcwb hw` GKwU bZb ev DbZ cY¨ evRv‡i D‡b¥Pb K‡ib Ges †mUv hw` evRv‡i mdj nq, Zvn‡j G m¤vebv _v‡K †h, cwZ‡hvMx cwZôvb¸‡jv wkMwiB ev wej‡¤ Avcbvi c‡Y¨i gZ ûeû ev KvQvKwQ KwiMix ˆewkó¨ m¤úb cY¨ ˆZwii †Póv Ki‡e| wKQ wKQ †¶‡Î, cwZ‡hvMxiv Zv‡`i A_‰bwZK wekvj‡Zi mweav, wekvj evRv‡i c‡ekwaKvi ev Kg g‡j¨i KvPvgv‡j c‡ekwaKv‡ii Kvi‡Y ûeû GK ev KvQvKwQ gv‡bi cY¨ Kg Li‡P ˆZwii mweav †c‡q _v‡K| GUv Avcbvi e¨emv‡qi Ici AZ¨waK Pvc c‡qvM Ki‡Z cv‡i, we‡kl K‡i hw` Avcwb bZb ev DbZ cY¨ Drcv`‡bi Rb¨ M‡elYv I Dbqb Lv‡Z wekvj As‡Ki A_ wewb‡qvM K‡i _v‡Kb|

†c‡U‡›Ui gva¨‡g gÄiKZ GK‡PwUqv AwaKvi †c‡U›U gwjK‡K cwZ‡hvMx‡`i †mB cY¨ ˆZwi ev †mB cwµqv e¨envi †_‡K weiZ ivLvi AwaKvi c`vb K‡i Ges Avcbv‡K ¶wZciY c`v‡bi e¨e¯v K‡i| AwaKvi j½‡bi NUbv †h N‡U‡Q Zv cgv‡Yi Rb¨ Avcbv‡K †`Lv‡Z n‡e †h, Avcbvi `wei ¯c‡¶i cwZwU Dcv`vb ev Bnvi mgK¶Zv H bKj cY¨ ev cwµqvq Ašf³ i‡q‡Q| Avcwb hLb wekvm Ki‡eb †c‡U›UKZ D™vebwU bKj Kiv n‡”Q ZLbB Avcbvi AwaKvi KvhKi Kiv AZ¨š¸i“ZcY| we‡kl K‡i cwZ‡hwMZvgjK Ae¯vb, evRvi †kqvi Ges jvfRbK Ae¯v eRvq ivLvi †¶‡Î|

†c‡U›U AwaKvi KvhKi Kivi `wqZ Kvi?

†c‡U›U j•Nb kbv³ Kiv Ges j•NbKvixi wei“‡× e¨e¯v Mn‡Yi cavb `wqZ †c‡U›U gwj‡Ki| †c‡U›U gwjK wn‡m‡e, evRv‡i Avcbvi D™ve‡bi e¨envi ch‡e¶Y, j•NbKvix kbv³ Ges Zv‡`i wei“‡× e¨e¯v †bqv n‡e wKbv, n‡j KLb I wKfv‡e Zv wbavi‡Yi `wqZ Avcbvi| ¯vaxb wewb‡qvMKvix Ges SME cwZôvb¸‡jv GKRb GK”QÎ jvB‡mÝ MnxZvi Kv‡Q GB `wqZ (A_ev wKQ Ask) n¯vš‡ii K_v we‡ePbv Ki‡Z cv‡ib|

Af¨šixY evRvi Ges idZwb evRvi Dfq †¶‡Î Avcbvi †c‡U›U AwaKvi KvhKixKi‡Yi c`‡¶c Mn‡Yi Kv‡R GKRb †c‡U›U AvBbRxex mnvqZv †bqvi civgk †`qv n‡”Q| GKRb AvBbRxex G wel‡q RwoZ LiP I SwK Ges m‡evrKó †KŠkj m¤ú‡K Avcbv‡K civgk w`‡Z cvi‡eb|

Ab‡gv`b Qvov †KD hw` Avcbvi †c‡U›U e¨envi K‡i Zvn‡j wK Ki‡eb?

Avcwb hw` wekvm K‡ib Ab¨vb¨iv Avcbvi †c‡U›U AwaKvi j•Nb Ki‡Q, A_vr Avcbvi Ab‡gv`b Qvov e¨envi Ki‡Q, Zvn‡j c_g c`‡¶c wn‡m‡e, Avcbv‡K j•NbKvix Ges Zv‡`i bKj cY¨ ev cwµqv e¨envi m¤ú‡K Z_¨msMn Ki‡Z n‡e| Avcbvi c`‡¶‡ci cKwZ I mgq wbavi‡Yi Rb¨ hveZxq Z_¨ msMn Kiv DwPZ| †c‡U›UKZ D™veb j•N‡bi wei"‡× e¨e¯v Mn‡Yi mgq mnvqZv Kivi Rb¨ memgq GKRb †c‡U›U AvBbRxex‡K wb‡qvM Ki"b| wKQ wKQ †¶‡Î, j•N‡bi NUbv hLb kbv³ Kiv nq, ZLb †Kv¤úvwb¸‡jv GKwU wPwV cvVv‡bvi wm×vš †bq (mvaviYZ cwiwPZ ÔwmR A¨vÛ wWwm÷ †jUviÕ wn‡m‡e), †hLv‡b Awfh³ j•NbKvix‡K Avcbvi AwaKvi Ges Ab¨ †Kv¤úvwbi e¨emvwqK KgKv‡Ûi g‡a¨ GKwU m¤ve¨ msNvZ wel‡q mZK Kiv n‡q _v‡K| Awb"QvKZ j•N‡bi †¶‡Î GRvZxq c`‡¶c †ek KvhKi, †hLv‡b j•NbKvix AwaKvsk †¶‡ÎB G RvZxq KgKvÛ cwiZ¨vM K‡i ev GKwU jvB‡mwÝs Pw³ mg‡SvZvq m¤§Z nq|

KLbI KLbI, j•NbKvix‡K bKj cY¨ jwK‡q ivLvi ev aŸsm Kivi mgq bv w`‡Z AZwKZ nwRiv n‡Z cv‡i m‡evrKó †KŠkj| G RvZxq cwiw¯wZ‡Z, j•NbKvix‡K †Kv‡bv †bvwUk bv w`‡q Av`vj‡Z wM‡q GKwU ÔAšeZx ¯wMZv‡`kÕ gÄ‡ii Av‡`k †bqv †h‡Z cv‡i| cwj‡ki mvnv‡h¨ j•NbKvixi e¨emvwqK cwZôv‡b nwRi n‡q GKwU Zjwk Pvjv‡bvi Rb¨ Av`vj‡Zi GB Av‡`k c‡qvRb nq| gvgjvi ivq cKv‡ki Av‡M Av`vjZ m‡›`nfvRb j•NbKvix‡K Zvi KgKvÛ e‡Üi Av‡`kI w`‡Z cv‡i (ivq cKvk n‡Z gvm ev eQi I †j‡M †h‡Z cv‡i)| Z‡e, GKwU †c‡U›U jw•NZ n‡q‡Q wK bv †m ckwU Avm‡j GKwU RwUj ck Ges gvgjv wb®úwËi gva¨‡gB GKwU wm×vš Avm‡Z cv‡i|

hw` †Kv¤úvwb Av`vj‡Z gvgjv i"R Kivi D‡`¨vM †bq, †m‡¶‡Î Av`vjZ we¶ä †c‡U›U gwjK‡K ¶wZciY c`v‡bi wb‡`k c`vb K‡i _v‡Kb| GKRb †c‡U›U AvBbRxex Avcbv‡K G welqK Z_¨ mieivn Ki‡Z cvi‡eb|

†c‡U›U j•Nb mswkó gvjvgvj Avg`vwb wbwl× Ki‡Z wKQ wKQ †`‡k RvZxq ïé KZc‡¶i gva¨‡g AvšRwZK mxgv‡š bvbv ai‡bi D‡`¨vM Mn‡Yi e¨e¯v _v‡K| A‡bK †`k, Zv‡`i mxgv‡š AvšRwZK `vqe×Zvi m‡½ m½wZcY D‡`¨vM wb‡Z mnvqZv K‡i, hw` bKj †UWgvKh³ cY¨ I cvB‡i‡UW KwcivBU gvjvgvj Avg`vwb Kiv nq|

mvaviY AvBb wn‡m‡e, Avcwb hw` †Kv‡bv j•N‡bi NUbv kbv³ K‡ib, Zvn‡j †ckvMZ AvBwb civgk Mn‡Yi mcwik Kiv n‡"Q|

www.wipo.int/sme/

Av`vj‡Zi evB‡i †c‡U›U j•N‡bi NUbv wb®úwËi †Kv‡bv e¨e¯v i‡q‡Q wK?

hw` †Kv‡bv †Kv¤úvwbi m‡½ we‡iva †`Lv †`q, hv‡`i m‡½ GKwU Pw³ ¯v¶wiZ n‡q‡Q (A_vr, GKwU jvB‡mwÝs Pw³), Zvn‡j LwZ‡q †`Lb Pw³i k‡Z mvwjk-wb®úwË ev ga¨¯Zv aviv i‡q‡Q wK bv| `xN‡gqv`x I e¨qeûj gvgjv cwµqv Gov‡bvi Rb¨ mcwik Kiv n‡"Q †hb Pw³‡Z GKwU we‡kl aviv _v‡K †hLv‡b we‡iva wb®úwËi Rb¨ mvwjk-wb®úwË ev ga¨¯Zvi Avkq †bqv hvq| Dfqc¶ hw` ivwR _v‡K Zvn‡j we‡iva wb®úwËi weKí c×wZI e¨envi Kiv m¤e, †hgb mvwjk-wb®úwË ev ga¨¯Zv, GgbwK Pw³‡Z hw` G RvZxq †Kv‡bv aviv bv _v‡K, GgbwK hw` †Kv‡bv Pw³ I bv _v‡K|

†c‡U›U bs wR we 2266045| ÔwWswKs f¨v‡mj mB‡Uej diBDR A¨vR Av †UBbvi KvcÕ, ewYwR¨Kfv‡e †hUv A¨wbl‡qAvc®Kvc bv‡g cwiwPZ, †c‡U›U Kiv nq 1992 mv‡j| h³iv‡R¨i D™veK/D‡`¨v³v g¨wÛ †nevig¨vb GUv †c‡U›U K‡ib| cwZ‡hvMx GKwU cwZôv‡bi gva¨‡g GB cY¨wU bKj nlqvi ci, †nevig¨vb †c‡U›U j•N‡bi Ici GKwU ¯wMZv‡`k jvf K‡ib Ges Av`vj‡Zi evB‡i welqwU wb®úwË K‡ib|

Av`vj‡Z gvgjvi Zjbvq mvwjk-wb®úwË mvaviYZ Kg Avbôvwb bK ev ¯í‡gqv`x n‡q _v‡K Ges mvwj‡ki wm×vš mn‡RB AvšRwZKfv‡e KvhKi‡hvM¨| ga¨¯Zvi mweav n‡"Q Dfqc‡¶i we‡iva wb®úwË cwµqvi Ici wbqšY _v‡K| GRvZxq †¶‡Î, Av‡iKwU cwZôv‡bi m‡½ PgrKvi e¨emvwqK m¤úK eRvq ivLv m¤e nq hv‡`i m‡½ Avcbvi †Kv¤úvwb fwel¨‡Z mn‡hvwMZv Kivi AvKv•¶v iv‡L| weKí we‡iva wb®úwËi Rb¨ WIPO mvwjk-wb®úwË I ga¨¯Zv †K›` †mev c`vb K‡i _v‡K| mvwjk-wb®úwË Ges ga¨¯Zv wel‡q Av‡iv Z_¨ cvIqv hv‡e *www.wipo.int/center/index.html* I‡qemvB‡U|

mvgvwi †PKwj ÷

- **mZK _vKb|** hZUv m¤e j•N‡bi NUbvkbv³ Ki‡Z cwZ‡hvMx‡`i cwZ bRi ivLb|
- **civgk wbb|** †c‡U›U KvhKi Ki‡Z †Kv‡bv c`‡¶c †bqvi Av‡M GKRb †c‡U›U A¨vUwbi m‡½ civgk Ki"b, †h‡nZ Avcbvi c¶ †_‡K †Kv‡bv D‡`¨vM gvgjvi djvd‡ji Ici cfve ivL‡Z cv‡i|
- **weKí we‡iva wb®úwË|** Av`vj‡Zi evB‡i we‡iva wb®úwËi †¶‡Î Ab¨vb¨ c×wZ¸‡jv we‡ePbv Ki"b Ges jvB‡mÝ Pw³‡Z mvwjk-wb®úwË ev ga¨¯Zvi aviwU Ašf³ Ki"b|

mshw³ 1Ñ mnvqK I‡qemvBU

AwZwi³ Z‡_¨i Rb¨

- e¨emvwqK `wó‡KvY †_‡K †gav m¤ú` mswkó wel‡qi Ici
  www.wipo.int/sme

- mvaviY A‡_ †c‡U›U
  www.wipo.int/patent/en/index.html

- †c‡U›U Av‡e`bcÎ `wLj mswkó ev¯—e w`K¸‡jv wel‡q mshw³ 2-G ZvwjKve× RvZxq Ges AvÂwjK †c‡U›U Awdm¸‡jvi I‡qemvBU †`Lb A_ev
  www.wipo.int/news/links/ipo

- †c‡U›U †KvAcv‡ikb wUwU wel‡q
  www.wipo.int/pct/en/index.html

- AvšRwZK †c‡U›U †kYxf³KiY wel‡q
  www.wipo.int/classifications/ipc/en

- mwjk-wb®úwË Ges ga¨¯—Zvi wel‡q
  www.wipo.int/center/index.html

- RvZxq I AvÂwjK †c‡U›U Awd‡mi AbjvBb WvUv‡eR †`L‡e
  www.wipo.int/ipdl/en/resources/links.jsp

- IP AwaKvi KvhKixKiY wel‡q
  www.wipo.int/enforcement

- WIPO cwiPwjZ Pw³i m`m¨c` mswkó Z_¨ †`L‡Z
  www.wipo.int/treaties/en/index.jsp

mshw³ 2Ñ B›Uvi‡bU wVKvbv
RvZxq I AvÂwjK †c‡U›U Awdm

AwdKvb †gav m¤ú` ms¯v	*www.oapi.wipo.net*
Avj‡Rwiqv	*www.inapi.org*
A¨vb‡Wvi v	*www.ompa.ad*
Av‡Rw›Ubv	*www.inpi.gov.ar*
Av‡gwbqv	*www.armpatent.org*
Aw÷qv	*www.patentamt.at*
A‡÷wjqv	*www.ipaustralia.gov.au*
evev‡WvR	*www.caipo.gov.bb*
†ejvBR	*www.belipo.bz*
†ejwRqvg	*www.european-patent-office.org/patlib/country/belgium*
ewjwfqv	*www.senapi.gov.bo*
ewRj	*www.inpi.gov.br*
ej‡Mwiqv	*www.bpo.bg*
KvbvWv	*www.cipo.gc.ca*
Pxb	*www.sipo.gov.cn*
Pxb (nsKsÑSRA)	*www.info.gov.hk/ipd*
Pxb (g¨vKvI)	*www.economia.gov.mo*
wPwj	*www.dpi.cl*
Kjw¤qv	*www.sic.gov.co*
†Kv÷wiKv	*www.registronacional.go.cr*
†µv‡qwkqv	*www.dziv.hr*
wKDev	*www.ocpi.cu*
†PK wicvewjK	*www.upv.cz*
†WbgvK	*www.dkpto.dk*
WwgwbKvb wicvewjK	*www.seic.gov.do/onapi*
wgki	*www.egypo.gov.eg*
Gj mvjfv`i	*www.cnr.gob.sv*

G‡¯vwbqv	*www.epa.ee*
BD‡iwkqvb †c‡U›U Awdm	*www.eapo.org*
BD‡iwwcqvb †c‡U›U Awdm	*www.epo.org*
wdbj¨vÛ	*www.prh.fi*
dvÝ	*www.inpi.fr*
RwRqv	*www.sakpatenti.org.ge*
Rvgwwb	*www.dpma.de*
Mxm	*www.gge.gr*
Mvjd †KvAcv‡ikb KvDwÝj	*www.gulf-patent-office.org.sa*
nv‡½wi	*www.hpo.hu*
AvBmj¨vÛ	*www.els.stjr.is*
fviZ	*www.patentoffice.nic.in*
B‡›`v‡bwkqv	*www.dgip.go.id*
Avqvij¨vÛ	*www.patentoffice.ie*
Bmiv‡qj	*www.justice.gov.il*
BUwj	*www.minindustria.it*
R¨vgvBKv	*www.jipo.gob.jm*
Rvcvb	*www.jpo.go.jp*
RWvb	*www.mit.gov.jo*
KvRwL¯vb	www.kazpatent.kz
†Kwbqv	*www.kipo.ke.wipo.net*
wKiwN¯vb	*www.krygyzpatent.kg*
jvI wccjÔm †W‡gvµwUK wicvewjK	*www.stea.la.wipo.net*
jvUwfqv	*www.lrpv.lv*
wj_wbqv	*www.vpb.lt*
j‡KgevM	*www.eco.public.lu*
gvj‡qwkqv	*www.mipc.gov.my*
†gw·‡Kv	*www.impi.gob.mx*
†gvbv‡Kv	*www.european-patent-office.org/patlib/country/monaco*
gi‡°v	*www.ompic.org.ma*
†b`vij¨vÛm	*www.bie.minez.nl*
†bcvj	*www.ip.np.wipo.net*

wbDwRj¨vÛ	*www.iponz.govt.nz*
bi I‡q	*www.patentstyret.no*
cvbvgv	*www.mici.gob.pa/comintf.html*
†ci“	*www.indecopi.gob.pe*
wdwjcvBbm	*www.ipophil.gov.ph*
†cvj¨vÛ	*www.uprp.pl*
cZMvj	*www.inpi.pt*
wicvewjK Ae K‡½v	*www.anpi.cg.wipo.net*
wicvewjK Ae †Kwiqv	*www.kipo.go.kr*
wicvewjK Ae †gwm‡Wwbqv	www.ippo.gov.mk
wicvewjK Ae gj‡`vfv	*www.agepi.md*
i“gwbqv	*www.osim.ro*
iwkqvb †dWv‡ikb	*www.rupto.ru*
mweqv I g‡›U‡b‡Mv	*www.yupat.sv.gov.yu*
wm½vci	*www.ipos.gov.sg*
†¯¥fvK wicvewjK	*www.indprop.gov.sk*
†¯¥‡fwbqv	*www.sipo.mzt.si*
†¯úb	*www.oepm.es*
mB‡Wb	*www.prv.se*
mBRvij¨vÛ	*www.ige.ch*
ZwRwK¯vb	*www.tjpat.org*
_vBj¨vÛ	*www.ipthailand.org*
Zi¯‹	*www.turkpatent.gov.tr*
wZDwbwmqv	*www.inorpi.ind.tn*
BD‡µb	*www.ukrpatent.org*
h³ivR¨	*www.patent.gov.uk*
h³ivó	www.uspto.gov
Di“M‡q	*http://dnpi.gub.uy*
DR‡ewK¯vb	*www.patent.uz*
†fwbR‡qjv	*www.sapi.gov.ve*

**`óe¨ :** nvjbvMv` Z‡_¨i Rb¨ †`Lb www.wipo.int/directory/en/urls.jsp

mshw³ 3Ñ wcwmwU

†c‡U›U †KvAcv‡ikb wUwU ¯v¶iKvix †`kmgn

(1 Rvbqwi 2005)

Avj‡ewbqv
Avj‡Rwiqv
A¨w›U¸qv I eveWv
Av‡gwbqv
A‡÷wjqv
Aw÷qv
AvRvievBRvb
evev‡Wvm
†ejvi“k
†ewjR
†ewbb
emwbqv I nv‡R‡Mvwfwbqv
eZ‡mvqvbv
ewRj
ej‡Mwiqv
ewKbv d¨v‡mv
K¨v‡gi“b
KvbvWv
†m›Uvj AwdKvb wicvewjK
kv`
Pxb
Kjw¤qv
K‡gv‡ivm (3 Gwcj, 2005 †_‡K KvhKi)
K‡½v
†Kv÷wiKv
AvBfwi †Kv÷
†µv‡qwkqv
wKDev
mvBcvm
†PK wicvewjK
†W‡gvµwUK wicvewjK Ae †Kwiqv
†WbgvK
WwgwbKv
BK‡qWi
wgki
wele wMwe
G‡¯wbqv
wdbj¨vÛ
M¨veb
Mvw¤qv
RwRqv
Rvgwb
Nvbv
wMm
MvbvWv
wMwb
wMwb-wel
nv‡½wi
AvBmj¨vÛ
fviZ
B‡›`v‡bwkqv
Avqvij¨vÛ
Bmiv‡qj
BZwj
Rvcvb
KvRwL¯vb
†Kwbqv
wKiwN¯vb
jvZwfqv
†j‡m‡_v

www.wipo.int/sme/

jvB‡ewiqv
†jBm‡UÝ‡UBb
wj_wbqv
j‡KgevM
gv`vMv¯‹vi
gvjvwq
gwj
†gŠwiZvwbqv
†gw·‡Kv
†gvbv‡Kv
g‡½vwjqv
gi‡°v
†gvRw¤K
bwgweqv
†b`vij¨vÛ
wbDwRj¨vÛ
wbKviv¸qv
bvB‡Rwiqv (8 †g, 2005 †_‡K KvhKi)
bvBRvi
bil‡q
Igvb
cvcqv wbDwMwb
wdwjcvBb
†cvj¨vÛ
cZMvj
wicvewjK Ae †Kwiqv
wicvewjK Ae gvj‡`vfv
i“gwbqv
iwkqvb †dWv‡ikb
†mB›U jwmqv
†mB›U wfb‡m›U Ges `v †MbvWvBbm
m¨vb g¨wi‡bv
†m‡bMvj
mweqv Ges g‡›U‡b‡Mv
wmwmwj
wm‡qiv wjlb
wm½vci
†¯w‡fwKqv
†¯w‡fwbqv
`w¶Y AwdKv
†¯úb
kxjsKv
m`vb
†mvqwRj¨vÛ
mB‡Wb
mBRvij¨vÛ
wmwiqvb Avie wicvewjK
ZwRwK¯vb
†gwm‡Wwbqv
†Uv‡Mv
wÎwb`vb I †Uvev‡Mv
wZDwbwmqv
Zi¯‹
ZwK‡gwb¯vb
DMvÛv
BD‡µb
msh³ Avie AwgivZ
h³ivR¨
ZvbRwbqv
h³ivó
DR‡ewK¯vb
wf‡qZbvg
Rw¤qv
wR¤ve‡q

**`óe¨ :** wcwmwU ¯v¶iKvix †`k¸‡jv m¤‡Ü Av‡iv nvjbvMv` Z‡_¨i Rb¨ †`Lb www.wipo.int/pct

For more information contact the
World Intellectual Property Organization

Address:
34, chemin des Colombettes
P.O. Box 18
CH-1211 Geneva 20
Switzerland

Telephone:
+41 22 338 91 11

Fax:
+41 22 733 54 28

e-mail:
wipo.mail@wipo.int

Visit the WIPO website at:
www.wipo.int

and order from the WIPO Electronic Bookshop at:
www.wipo.int/ebookshop

or its SMEs Division at:
Address:
34, chemin des Colombettes
P.O. Box 18
CH-1211 Geneva 20 Switzerland

Fax:
+41 22 338 87 60

e-mail:
sme@wipo.int

Web page:
www.wipo.int/sme

Department of Patents, Designs and Trademarks, Ministry of Industries

Address:
Shilpa Bhaban (5th Floor) 91, Motijheel C/A
Dhaka-1000, Bangladesh.

Telephone:
880-2-9560696 (Office)
880-2-8333337 (Res.)

Fax:
880-2-9556556

Website:
www.dpdt.gov.bd

Copyright Office, Ministry of Cultural Affairs Bangladesh

Address:
National Library Building (2nd Floor)
32, S. M. Morshed Sarani, Agargaon
Sher-e-Bangla Nagar, Dhaka.

Website:
www.copyrightofficebd.com

Phone:
88-02-9119632

Fax:
88-02-8111384

WIPO Publication No. 917 BD (Bengali)

ISBN 978-92-805-2091-0